5mL False Bottom Tubes with Separate Screw Cap

Item# 5527 / 5527B / 5527AM / 5528 / 5528B



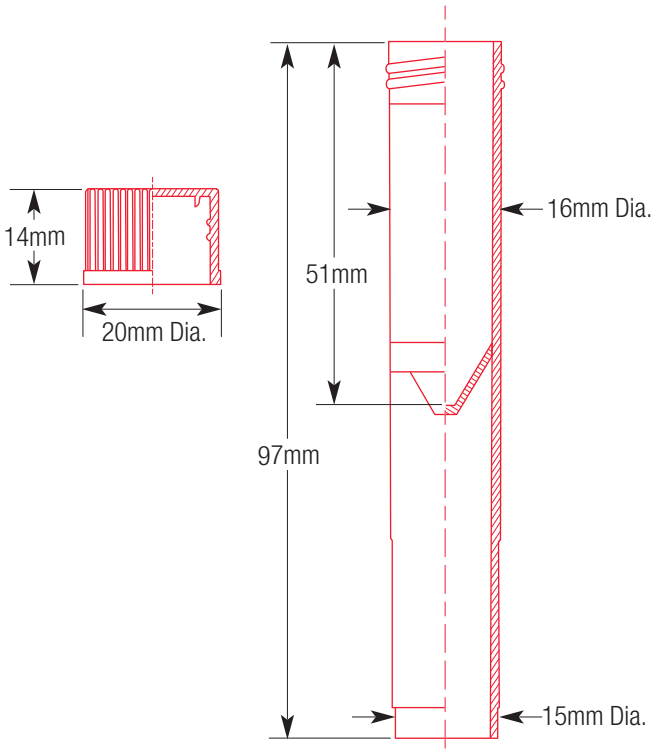

Description

Globe Scientific's false bottom tubes are ideal for use as a secondary tube for barcoding on automated analyzers.

Popular analyzers include Hitachi®, Olympus®, Corning®, Ortho®, Kodak®, Beckman®, IA®, Tosoh®, Vitros® and more.

These polypropylene tubes are resistant to most chemical reagents and can be autoclaved at 121ºC.

Features

- 5mL capacity tubes available in natural or amber
- Polypropylene (PP) vials and cap
- Screwcap (sold separately)
- Conical false bottom
- Self-standing
- Non-graduated

Products

Item#	Description	Unit
5527	5mL false bottom tube, PP, natural	1000
5527B	5mL false bottom tube, PP, natural	1500
5527AM	5mL false bottom tube, PP, amber	1500
5528	White screw cap	1000
5528B	White screw cap	1500

Technical Specifications

Material: Tube:	Polypropylene (PP)
Cap:	Polypropylene (PP)
Autoclavable:	Yes. 121ºC for 20 mintues with cap removed
Brittleness temperature:	0ºC
Maximum temperature:	135ºC
Sterlity:	Non-sterile