IN HOUSE ASSEMBLY TEMPLATE

METAL ACTIVITY TABLE

X7000 & X8000 SERIES
ASSEMBLY INSTRUCTIONS

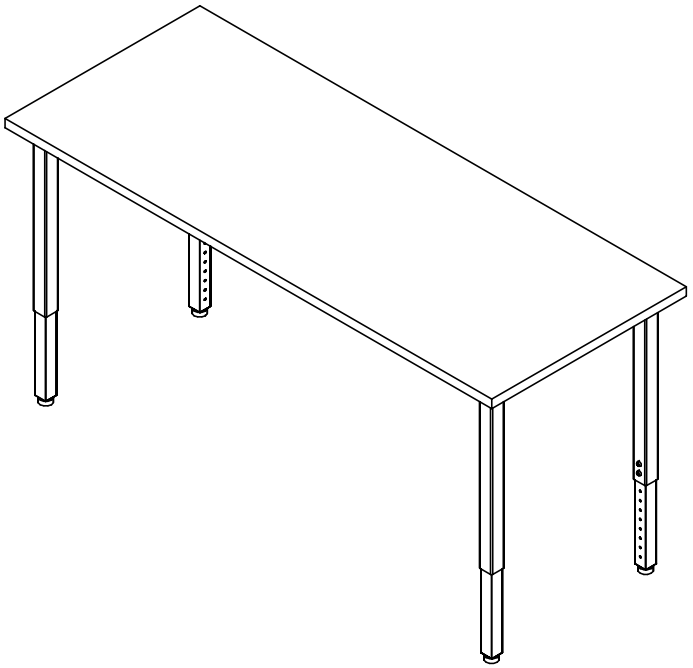

NOTE:

1. MODEL VIEWS MAY NOT REPRESENT EXACT MODEL PURCHASED

REV.	DESCRIPTION	DATE	NAME	ECN NO.
D	ADDED LEG FLANGE TO STEP 3 IMAGE	9/7/16	JCF	-
C	UPDATED TOOLS AND COMPONETS & STEPS 2 & 3	6/30/16	EMK	-
B	UPDATED STEP 2	6/29/16	EMK	-
A	CREATED ASSEMBLY INSTRUCTIONS	3/3/14	EMK	-

REVISION LEVEL

DWN BY:	EMK	DWN DATE:	3/3/14
APR BY:		DATE APR:	
APR BY:		DATE APR:	

UNLESS OTHERWISE SPECIFIED DIMENSION ARE IN INCHES
CABINET SQUARENESS ± .0625
FRACTIONAL VALUES ± 1/32"
- ALL VALUES ± OVERALL -

THIS DRAWING IS THE SOLE PROPERTY OF DIVERSIFIED WOOD CRAFTS. IT MAY NOT BE ALTERED OR CHANGED WITHOUT PERMISSION

ASSEMBLY INSTRUCTIONS

DRAWING NUMBER:	SCALE:	SHEET:	REVISION:
X7000 & X8000 SERIES	NTS	1 OF 4	REV D

TOOLS REQUIRED
½" WRENCH
½" SOCKET AND TORQUE WRENCH - OPTIONAL
* 11/64" DRILL BIT *
** 3/16" ALLEN WRENCH **

ASSEMBLY COMPONENTS

ITEMS INCLUDED	PART #	PART DESCRIPTION	QTY
TOP ASSEMBLY	VARIES	VARIES WITH STYLE	1
STEEL FRAME	VARIES	VARIES WITH STYLE	1
*** SILICONE ***	100711	SILICONE,SEALANT,CLEAR	1
LEG KIT - X7000 SERIES	249375	LEG KIT - FIXED HEIGHT LEGS	1
OR			
LEG KIT - X8000 SERIES	249374	LEG KIT - ADJ. HEIGHT LEGS	1

NOTE:

1. *XX* INDICATES ITEMS USED ONLY FOR PHENOLIC TOPS.
2. **XX** INDICATES ITEMS USED ONLY FOR ADJUSTABLE HEIGHT TABLES (X8000 SERIES).
3. ***XX*** INDICATES ITEMS USED ONLY FOR EPOXY TOPS.

REV.	DESCRIPTION	DATE	NAME	ECN NO.
D	ADDED LEG FLANGE TO STEP 3 IMAGE	9/7/16	JCF	-
C	UPDATED TOOLS AND COMPONETS & STEPS 2 & 3	6/30/16	EMK	-
B	UPDATED STEP 2	6/29/16	EMK	-
A	CREATED ASSEMBLY INSTRUCTIONS	3/3/14	EMK	-

REVISION LEVEL

DWN BY:	EMK	DWN DATE:	3/3/14
APR BY:		DATE APR:	
APR BY:		DATE APR:	

UNLESS OTHERWISE SPECIFIED DIMENSION ARE IN INCHES
CABINET SQUARENESS ± .0625
FRACTIONAL VALUES ± 1/32"
- ALL VALUES ± OVERALL -

THIS DRAWING IS THE SOLE PROPERTY OF DIVERSIFIED WOOD CRAFTS. IT MAY NOT BE ALTERED OR CHANGED WITHOUT PERMISSION

METAL ACTIVITY TABLE
TOOLS AND ASSEMBLY COMPONENTS

DRAWING NUMBER:	SCALE:	SHEET:	REVISION:
X7000 & X8000 SERIES	NTS	2 OF 4	REV D

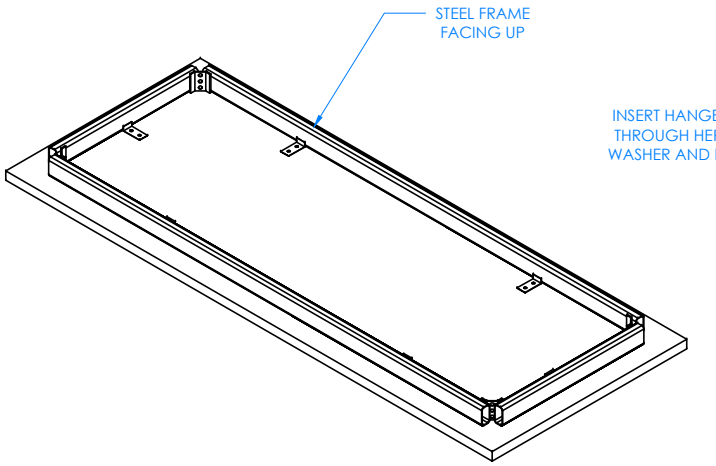

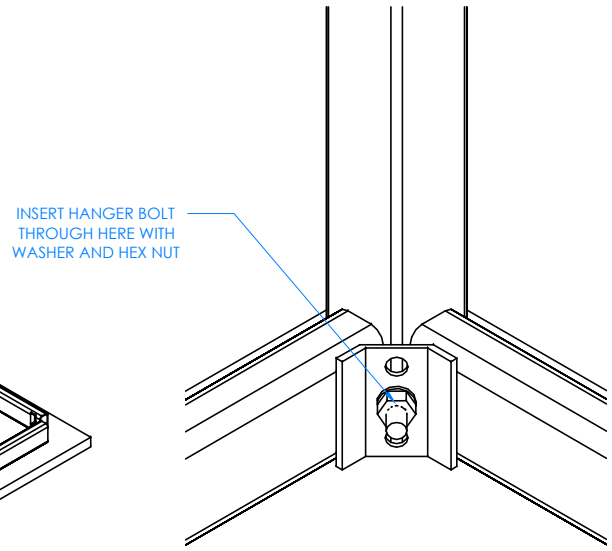

CLOSE UP OF CORNER LEG ASSEMBLY

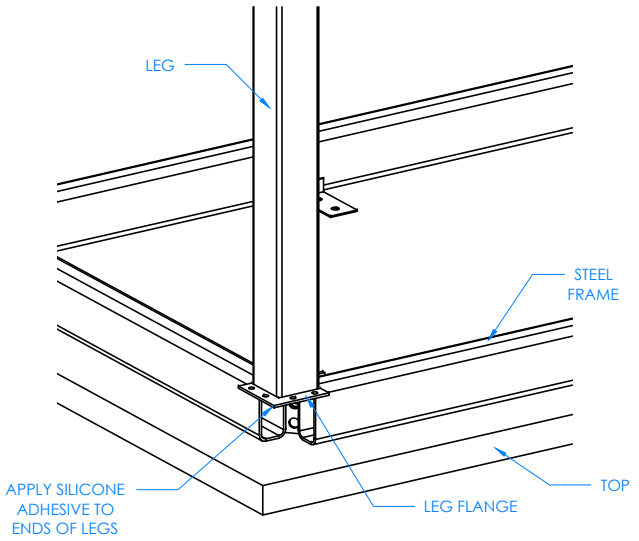

CLOSE UP OF CORNER LEG ASSEMBLY FOR EPOXY TOPS

STEP 1:

LAY TOP ASSEMBLY ON THE FLOOR WITH THE STEEL FRAME FACING UP. BE SURE TOP ASSEMBLY IS ON A CLEAN SURFACE TO PREVENT DAMAGE.

STEP 2:

(IF YOU HAVE A PLAM, CHEMGUARD OR PHENOLIC TOP, CONTINUE WITH THIS STEP. IF YOU HAVE A EPOXY TOP, SKIP TO STEP 3). INSERT HANGER BOLT ON ONE OF THE LEGS THROUGH THE CORNER BRACKET AND INSERT LOCK WASHER AND HEX NUT. TIGHTEN BOLT USING ½" WRENCH OR ½" SOCKET AND TORQUE WRENCH. FOR PLAM OR CHEMGUARD TOPS, USE THE SCREWS PROVIDED AND SCREW THRU LEG FLANGE INTO TABLE TOP (NOT SHOWN). FOR PHENOLIC TOPS, PRE-DRILL PILOT HOLES INTO TOP ¾" DEEP WITH 1/64" DRILL BIT AND SCREW THRU LEG FLANGE INTO TABLE TOP (NOT SHOWN). MAKE SURE LEG IS SCREWED ON TIGHT. REPEAT FOR OTHER 3 LEGS.

STEP 3:

FOR AN EPOXY TOP, PLACE SILICONE ADHESIVE TO THE TOP EDGES OF THE LEGS. INSERT HANGER BOLT ON ONE OF THE LEGS THROUGH THE CORNER BRACKET AND INSERT LOCK WASHER AND HEX NUT (SEE PICTURE IN STEP 2). TIGHTEN BOLT USING ½" WRENCH OR ½" SOCKET AND TORQUE WRENCH. REPEAT FOR THE OTHER 3 LEGS.

NOTE:

1.

REV.	DESCRIPTION	DATE	NAME	ECN NO.
D	ADDED LEG FLANGE TO STEP 3 IMAGE	9/7/16	JCF	-
C	UPDATED TOOLS AND COMPONETS & STEPS 2 & 3	6/30/16	EMK	-
B	UPDATED STEP 2	6/29/16	EMK	-
A	CREATED ASSEMBLY INSTRUCTIONS	3/3/14	EMK	-

REVISION LEVEL

DWN BY:	EMK	DWN DATE:	3/3/14
APR BY:		DATE APR:	
APR BY:		DATE APR:	

UNLESS OTHERWISE SPECIFIED DIMENSION ARE IN INCHES
CABINET SQUARENESS ± .0625
FRACTIONAL VALUES ± 1/32"
- ALL VALUES ± OVERALL -

THIS DRAWING IS THE SOLE PROPERTY OF DIVERSIFIED WOOD CRAFTS. IT MAY NOT BE ALTERED OR CHANGED WITHOUT PERMISSION

METAL ACTIVITY TABLE ASSEMBLY INSTRUCTIONS

DRAWING NUMBER:	SCALE:	SHEET:	REVISION:
X7000 & X8000 SERIES	NTS	3 OF 4	REV D

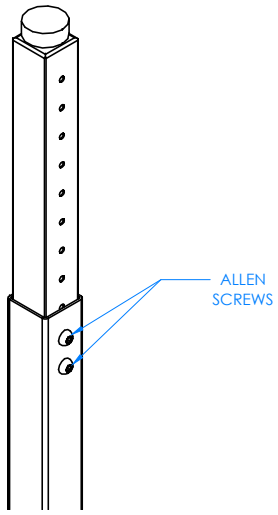

CLOSE UP OF X8000 SERIES LEG ASSEMBLY

STEP 4:

(IF YOU DON'T HAVE THE X8000 SERIES, SKIP TO STEP 5). ADJUST THE LEGS TO DESIRED HEIGHT BY REMOVING THE 2 ALLEN SCREWS IN EACH LEG (BE CAREFUL TO SUPPORT THE LEG AS IT WILL FALL ONCE SCREWS ARE REMOVED). MOVE THE LEG TO A NEW HEIGHT AND RE-INSERT THE ALLEN SCREWS AND TIGHTEN. REPEAT FOR OTHER 3 LEGS.

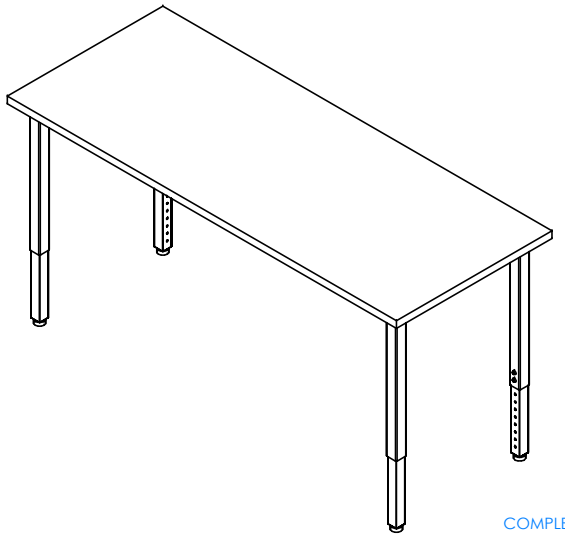

COMPLETE UNIT SHOWN

STEP 5:

TURN TABLE OVER ONTO THE LEGS, SET YOUR TABLE TO DESIRED LOCATION AND ADJUST THE LEG LEVELERS TO LEVEL TABLE.

NOTE:

1.

REV.	DESCRIPTION	DATE	NAME	ECN NO.
D	ADDED LEG FLANGE TO STEP 3 IMAGE	9/7/16	JCF	-
C	UPDATED TOOLS AND COMPONETS & STEPS 2 & 3	6/30/16	EMK	-
B	UPDATED STEP 2	6/29/16	EMK	-
A	CREATED ASSEMBLY INSTRUCTIONS	3/3/14	EMK	-

REVISION LEVEL

DWN BY:	EMK	DWN DATE:	3/3/14
APR BY:		DATE APR:	
APR BY:		DATE APR:	

UNLESS OTHERWISE SPECIFIED DIMENSION ARE IN INCHES
CABINET SQUARENESS ± .0625
FRACTIONAL VALUES ± 1/32"
- ALL VALUES ± OVERALL -

THIS DRAWING IS THE SOLE PROPERTY OF DIVERSIFIED WOOD CRAFTS. IT MAY NOT BE ALTERED OR CHANGED WITHOUT PERMISSION

METAL ACTIVITY TABLE ASSEMBLY INSTRUCTIONS

DRAWING NUMBER:	SCALE:	SHEET:	REVISION:
X7000 & X8000 SERIES	NTS	4 OF 4	REV D