IN HOUSE ASSEMBLY TEMPLATE

THE WORKTOP CLASSIC

WX4-P & WX4-M SERIES

ASSEMBLY INSTRUCTIONS

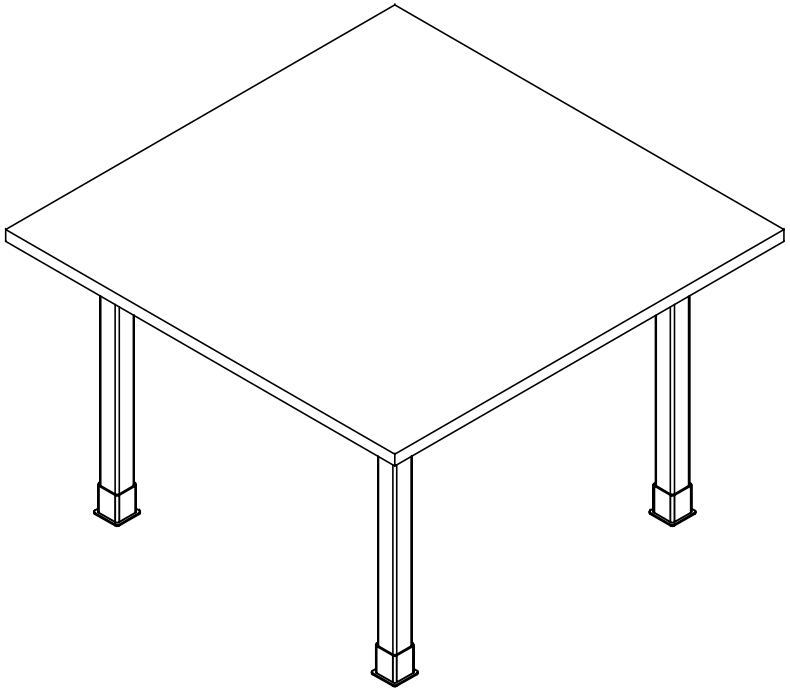

NOTE:

1. MODEL VIEWS MAY NOT REPRESENT EXACT MODEL PURCHASED

DWN BY:	EMK	DWN DATE:	10/24/14
APR BY:		DATE APR:	
APR BY:		DATE APR:	

UNLESS OTHERWISE SPECIFIED DIMENSION ARE IN INCHES

CABINET SQUARENESS ± .0625
FRACTIONAL VALUES ± 1/32"
- ALL VALUES ± OVERALL -

REV.	DESCRIPTION	DATE	NAME	ECN NO.
A	CREATED ASSEMBLY INSTRUCTIONS	10/24/14	EMK	-

REVISION LEVEL

THIS DRAWING IS THE SOLE PROPERTY OF DIVERSIFIED WOOD CRAFTS. IT MAY NOT BE ALTERED OR CHANGED WITHOUT PERMISSION

THE WORKTOP CLASSIC
ASSEMBLY INSTRUCTIONS

DRAWING NUMBER:	SCALE:	SHEET:	REVISION:
WX4 SERIES	NTS	1 OF 3	REV A

TOOLS REQUIRED
½" WRENCH
½" SOCKET AND TORQUE WRENCH - OPTIONAL

ASSEMBLY COMPONENTS

ITEMS INCLUDED	PART #	PART DESCRIPTION	QTY
TOP AND APRON ASSEMBLY	N/A	TOP ASSEMBLY (FACTORY ASSEMBLY) - TOP VARIES	1
LEGS	VARIES	LEG,MPL - HEIGHT VARIES WITH TABLE STYLE	4
LEG HARDWARE	520001-4	LEG HARDWARE KIT, 4 LEGS	1
LEG BOOTS	100076	LEG BOOT, BLK RUBBER	4

NOTE:

1. TOP STYLES = MAPLE (M) AND ALMOND P.LAM (P).
2. LEG HEIGHT VARIES - STANDARD HEIGHT (30"H) OR ELEMENTARY HEIGHT (26").

DWN BY:	EMK	DWN DATE:	10/24/14
APR BY:		DATE APR:	
APR BY:		DATE APR:	

UNLESS OTHERWISE SPECIFIED DIMENSION ARE IN INCHES
CABINET SQUARENESS ± .0625
FRACTIONAL VALUES ± 1/32"
- ALL VALUES ± OVERALL -

REV.	DESCRIPTION	DATE	NAME	ECN NO.
A	CREATED ASSEMBLY INSTRUCTIONS	10/24/14	EMK	-

REVISION LEVEL

THIS DRAWING IS THE SOLE PROPERTY OF DIVERSIFIED WOOD CRAFTS. IT MAY NOT BE ALTERED OR CHANGED WITHOUT PERMISSION

THE WORKTOP CLASSIC
TOOLS AND ASSEMBLY COMPONENTS

DRAWING NUMBER:	SCALE:	SHEET:	REVISION:
WX4 SERIES	NTS	2 OF 3	REV A

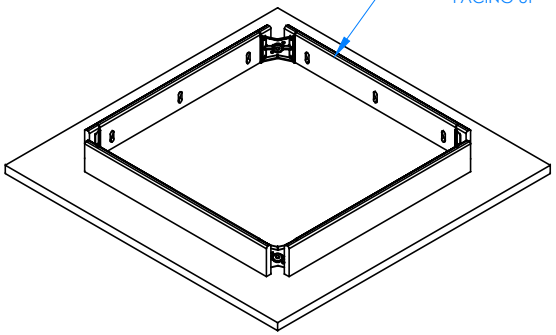

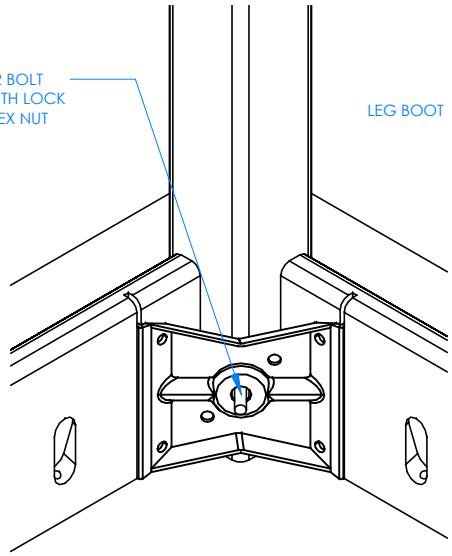

CLOSE UP OF CORNER LEG ASSEMBLY

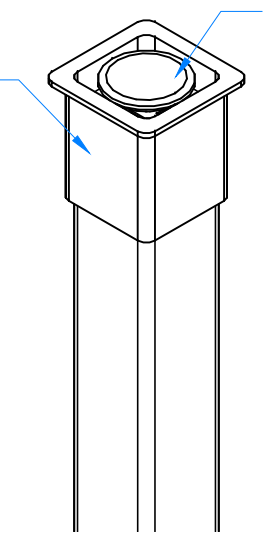

CLOSE UP OF LEG BOOT AND LEVELER ASSEMBLY

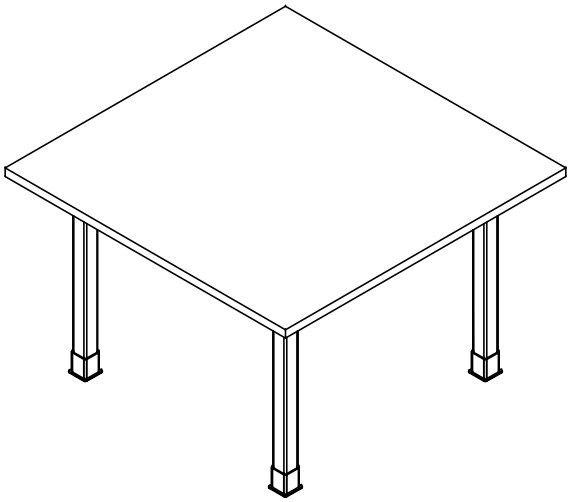

COMPLETE UNIT SHOWN

STEP 1:

LAY TOP ASSEMBLY ON FLOOR WITH APRON SIDE FACING UP. BE SURE TOP ASSEMBLY IS ON A CLEAN SURFACE TO PREVENT DAMAGE .

STEP 2:

INSERT THE HANGER BOLT ON ONE OF THE LEGS THROUGH THE CORNER BRACKET AND INSERT THE LOCK WASHER AND HEX NUT. TIGHTEN NUT USING A ½" WRENCH OR ½" SOCKET AND TORQUE WRENCH, TO A MINIMUM OF 12FT LBS BUT NOT TO EXCEED 17FT LBS . REPEAT FOR THE OTHER 3 LEGS.

STEP 3:

SLIDE LEG BOOTS ONTO THE LEGS WITH FLARED END TOWARD THE BOTTOM OF LEG. SCREW LEG LEVELERS INTO T-NUT ON BOTTOM OF LEG.

STEP 4:

TURN TABLE OVER SO TOP IS UP. SET YOUR TABLE IN PLACE AND ADJUST THE LEG LEVELERS TO LEVEL THE TABLE. SLIDE LEG BOOTS DOWN TO THE FLOOR.

NOTE:

1.

REV.	DESCRIPTION	DATE	NAME	ECN NO.
A	CREATED ASSEMBLY INSTRUCTIONS	10/24/14	EMK	-

REVISION LEVEL

DWN BY:	EMK	DWN DATE:	10/24/14
APR BY:		DATE APR:	
APR BY:		DATE APR:	

UNLESS OTHERWISE SPECIFIED DIMENSION ARE IN INCHES
CABINET SQUARENESS ± .0625
FRACTIONAL VALUES ± 1/32"
- ALL VALUES ± OVERALL -

THIS DRAWING IS THE SOLE PROPERTY OF DIVERSIFIED WOOD CRAFTS. IT MAY NOT BE ALTERED OR CHANGED WITHOUT PERMISSION

ASSEMBLY INSTRUCTIONS

DRAWING NUMBER:	SCALE:	SHEET:	REVISION:
WX4 SERIES	NTS	3 OF 3	REV A