WOOD WORKBENCH

WW231 & WW232

ASSEMBLY INSTRUCTIONS

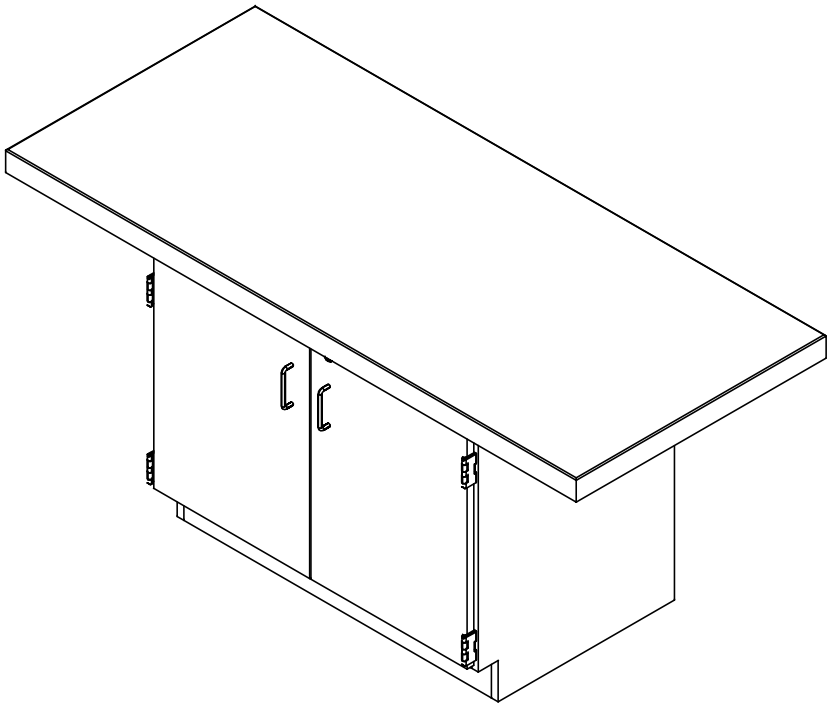

NOTE:

1. MODEL VIEWS MAY NOT REPRESENT EXACT MODEL PURCHASED

DWN BY:	EMK	DWN DATE:	3/7/14
APR BY:		DATE APR:	
APR BY:		DATE APR:	

UNLESS OTHERWISE SPECIFIED DIMENSION ARE IN INCHES

CABINET SQUARENESS ± .0625
FRACTIONAL VALUES ± 1/32"
- ALL VALUES ± OVERALL -

ASSEMBLY INSTRUCTIONS

REV.	DESCRIPTION	DATE	NAME	ECN NO.
A	CREATED ASSEMBLY INSTRUCTIONS	3/7/14	EMK	-

REVISION LEVEL

THIS DRAWING IS THE SOLE PROPERTY OF DIVERSIFIED WOOD CRAFTS. IT MAY NOT BE ALTERED OR CHANGED WITHOUT PERMISSION

DRAWING NUMBER:	SCALE:	SHEET:	REVISION:
WW231 & WW232	NTS	1 OF 3	REV A

TOOLS REQUIRED
SCREW DRIVER
CONTACT CEMENT

ASSEMBLY COMPONENTS

ITEMS INCLUDED	PART #	PART DESCRIPTION	QTY
TOP	16-0036	TOP,MPL,2.25X28X64	1
SCREWS - TOP	100641	SCREW#8X1¾" QUAD RD WASH HD	4
CORNER BASE ASSEMBLY	206513	CORNER,BASE,ASSY,SST,2 CORNER W/ SCREWS	2
RUBBER BASE MOLDING	100283	RUBBER BASE MOLDING (SOLD BY FOOT)	9.66
VISE - OPTIONAL	234708	VISE-SHAIN CUSTOM VISE WITH LOGO	VARIES

NOTE:

1.

REV.	DESCRIPTION	DATE	NAME	ECN NO.
A	CREATED ASSEMBLY INSTRUCTIONS	3/7/14	EMK	-

REVISION LEVEL

DWN BY:	EMK	DWN DATE:	3/7/14
APR BY:		DATE APR:	
APR BY:		DATE APR:	

UNLESS OTHERWISE SPECIFIED DIMENSION ARE IN INCHES

CABINET SQUARENESS ± .0625
FRACTIONAL VALUES ± 1/32"
- ALL VALUES ± OVERALL -

THIS DRAWING IS THE SOLE PROPERTY OF DIVERSIFIED WOOD CRAFTS. IT MAY NOT BE ALTERED OR CHANGED WITHOUT PERMISSION

TOOLS AND ASSEMBLY COMPONENTS

DRAWING NUMBER:	SCALE:	SHEET:	REVISION:
WW231 & WW232	NTS	2 OF 3	REV A

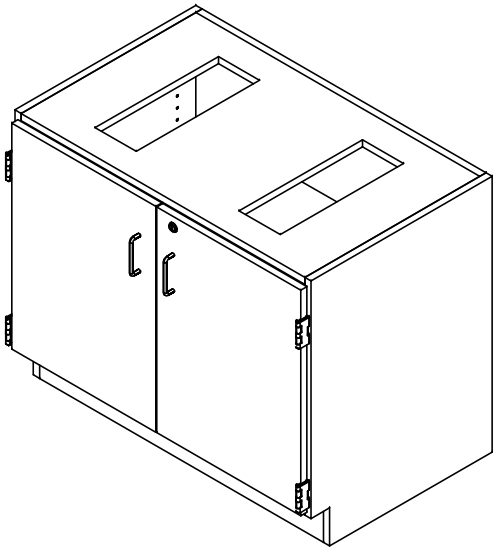

STEP 1:

POSITION THE BASE CABINET IN YOUR DESIRED LOCATION. LEVEL THE CABINET. CABINETS MUST BE LEVELED OR DOORS AND DRAWERS MAY NOT OPEN OR CLOSE CORRECTLY .

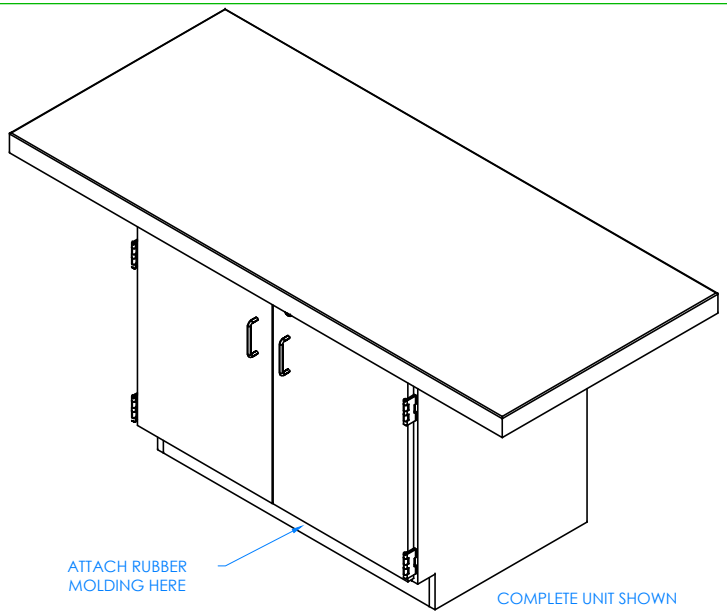

STEP 2:

ATTACH THE TOP TO THE CABINET WITH THE SCREWS PROVIDED. SCREW THROUGH THE INSIDE OF THE CABINET TO THE TOP. MAKE SURE SCREWS ARE TIGHT AND TOP IS SECURE. ATTACH RUBBER MOLDING USING CONTACT CEMENT. AFTER MOLDING IS IN PLACE, SCREW STAINLESS STEEL CORNER BRACKETS ON EACH CORNER OVER THE BASE MOLDING. ATTACH VISES IF INCLUDED.

NOTE:

1.

A	CREATED ASSEMBLY INSTRUCTIONS	3/7/14	EMK	-
REV.	DESCRIPTION	DATE	NAME	ECN NO.
REVISION LEVEL				

DWN BY:	EMK	DWN DATE:	3/7/14
APR BY:		DATE APR:	
APR BY:		DATE APR:	

UNLESS OTHERWISE SPECIFIED DIMENSION ARE IN INCHES
CABINET SQUARENESS ± .0625
FRACTIONAL VALUES ± 1/32"
- ALL VALUES ± OVERALL -

THIS DRAWING IS THE SOLE PROPERTY OF DIVERSIFIED WOOD CRAFTS. IT MAY NOT BE ALTERED OR CHANGED WITHOUT PERMISSION

WOOD WORKBENCH ASSEMBLY INSTRUCTIONS

DRAWING NUMBER:	SCALE:	SHEET:	REVISION:
WW231 & WW232	NTS	3 OF 3	REV A