WOOD WORKBENCH

WW231-0V, WW231-1V, WW231-2V, WW232-0V, WW232-1V, & WW232-2V

ASSEMBLY INSTRUCTIONS

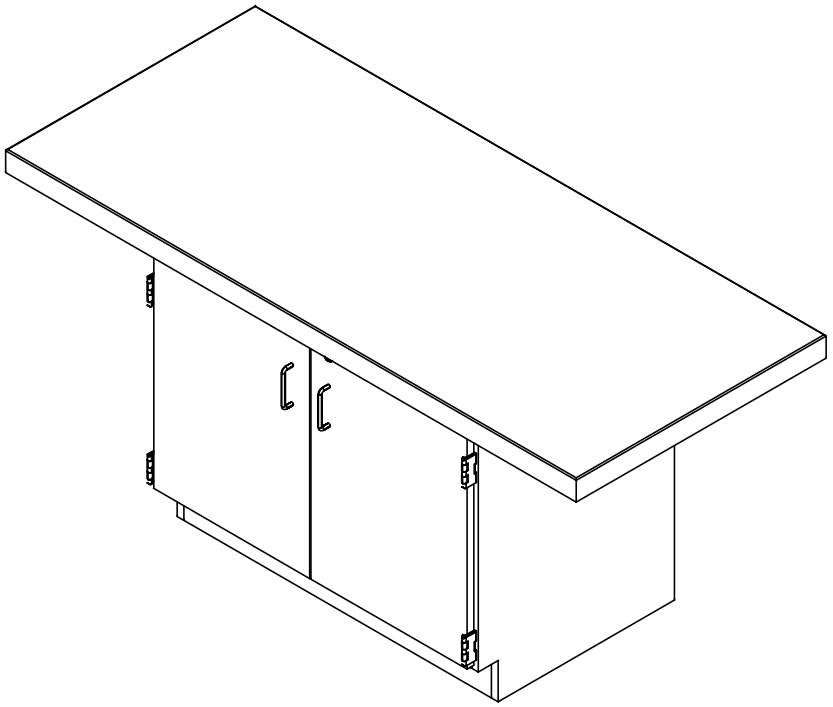

NOTE:

1. MODEL VIEWS MAY NOT REPRESENT EXACT MODEL PURCHASED

DWN BY:	EMK	DWN DATE:	3/7/14
APR BY:		DATE APR:	
APR BY:		DATE APR:	

UNLESS OTHERWISE SPECIFIED DIMENSION ARE IN INCHES

CABINET SQUARENESS ± .0625
FRACTIONAL VALUES ± 1/32"
- ALL VALUES ± OVERALL -

REV.	DESCRIPTION	DATE	NAME	ECN NO.
A	CREATED ASSEMBLY INSTRUCTIONS	3/7/14	EMK	-

REVISION LEVEL

THIS DRAWING IS THE SOLE PROPERTY OF DIVERSIFIED WOOD CRAFTS. IT MAY NOT BE ALTERED OR CHANGED WITHOUT PERMISSION

WOOD WORKBENCH
ASSEMBLY INSTRUCTIONS

DRAWING NUMBER:	SCALE:	SHEET:	REVISION:
WW231 & WW232	NTS	1 OF 7	REV A

TOOLS REQUIRED
SCREW DRIVER
CONTACT CEMENT

ASSEMBLY COMPONENTS

ITEMS INCLUDED	PART #	PART DESCRIPTION	QTY
TOP	16-0036	TOP,MPL,2.25X28X64	1
SCREWS - TOP	100641	SCREW#8X1¾" QUAD RD WASH HD	12
BASE CABINET	N/A	BASE CABINET - 36"W X 29"H X 22"D	1
CORNER BASE ASSEMBLY	206513	CORNER,BASE,ASSY,SST,2 CORNER W/ SCREWS	2
RUBBER BASE MOLDING	100283	RUBBER BASE MOLDING (SOLD BY FOOT)	9.66
VISE - OPTIONAL	234708	VISE-SHAIN CUSTOM VISE WITH LOGO	VARIES
SHELF CLIPS	100027	SHELF CLIPS,PLASTIC,5MM PIN	4

NOTE:

1. **XX** INDICATES ITEMS USED ONLY FOR THE WW231 UNITS.
   1.1. WW231-0V, WW231-1V, & WW231-2V
2. COMPONENTS VARY WITH STYLE OF WOOD WORKBENCH PURCHASED.

REV.	DESCRIPTION	DATE	NAME	ECN NO.
A	CREATED ASSEMBLY INSTRUCTIONS	3/7/14	EMK	-

REVISION LEVEL

DWN BY:	EMK	DWN DATE:	3/7/14
APR BY:		DATE APR:	
APR BY:		DATE APR:	

UNLESS OTHERWISE SPECIFIED DIMENSION ARE IN INCHES
CABINET SQUARENESS ± .0625
FRACTIONAL VALUES ± 1/32"
- ALL VALUES ± OVERALL -

THIS DRAWING IS THE SOLE PROPERTY OF DIVERSIFIED WOOD CRAFTS. IT MAY NOT BE ALTERED OR CHANGED WITHOUT PERMISSION

WOOD WORKBENCH
TOOLS AND ASSEMBLY COMPONENTS

DRAWING NUMBER:	SCALE:	SHEET:	REVISION:
WW231 & WW232	NTS	2 OF 7	REV A

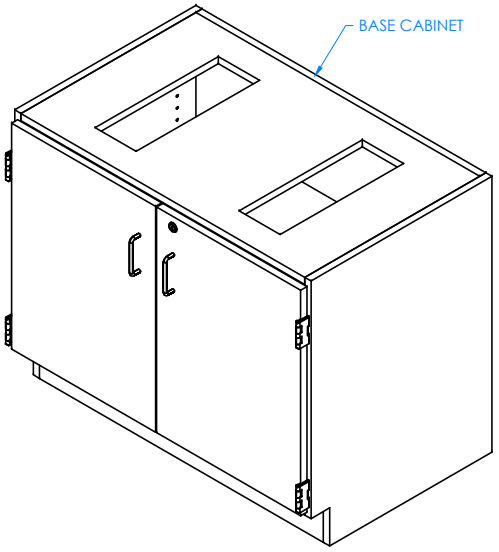

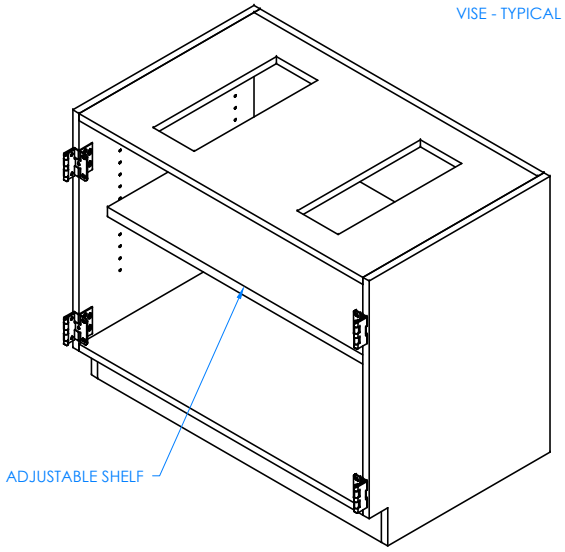

DOORS REMOVED TO SHOW CLARITY

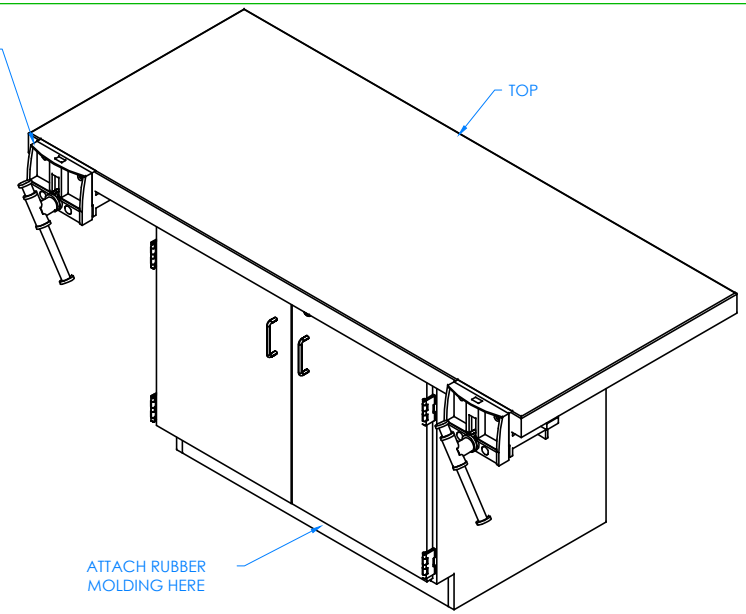

COMPLETE UNIT SHOWN

STEP 1:

POSITION THE BASE CABINET IN YOUR DESIRED LOCATION. LEVEL THE CABINET. CABINETS MUST BE LEVELED OR DOORS AND DRAWERS MAY NOT OPEN OR CLOSE CORRECTLY .

STEP 2:

IF YOUR UNIT DOES NOT HAVE AN ADJUSTABLE SHELF, SKIP TO STEP 3. INSERT SHELF CLIPS IN DESIRED LOCATION. PLACE SHELVES ON CLIPS, MAKING SURE THEY ARE LEVEL.

STEP 3:

PLACE TOP ON CABINET WITH PROPER OVERHANG (CENTERED ON WORKBENCH). ATTACH TOP TO THE CABINET WITH THE SCREWS PROVIDED. SCREW THROUGH THE INSIDE OF THE CABINET TO THE TOP. MAKE SURE SCREWS ARE TIGHT AND TOP IS SECURE. ATTACH RUBBER MOLDING USING CONTACT CEMENT. AFTER MOLDING IS IN PLACE, SCREW STAINLESS STEEL CORNER BRACKETS ON EACH CORNER OVER THE BASE MOLDING. ATTACH VISES IF INCLUDED.

NOTE:

1.

DWN BY:	EMK	DWN DATE:	3/7/14	
APR BY:		DATE APR:		
APR BY:		DATE APR:		

UNLESS OTHERWISE SPECIFIED DIMENSION ARE IN INCHES
CABINET SQUARENESS ± .0625
FRACTIONAL VALUES ± 1/32"
- ALL VALUES ± OVERALL -

WOOD WORKBENCH ASSEMBLY INSTRUCTIONS

REV.	DESCRIPTION	DATE	NAME	ECN NO.
A	CREATED ASSEMBLY INSTRUCTIONS	3/7/14	EMK	-

REVISION LEVEL

THIS DRAWING IS THE SOLE PROPERTY OF DIVERSIFIED WOOD CRAFTS. IT MAY NOT BE ALTERED OR CHANGED WITHOUT PERMISSION

DRAWING NUMBER:	SCALE:	SHEET:	REVISION:
WW231 & WW232	NTS	3 OF 7	REV A

Warning:

Misuse of vises can cause serious injury to eyes, hands and or other body parts. Vises must be set up and used properly. Before setup and use, read, understand and follow all instructions outlined.

ALWAYS make sure bench tops are properly secured.

ALWAYS use proper mounting hardware in all mounting holes to hold vise securely.

ALWAYS inspect mounting hardware to ensure vise is securely fastened to work bench.

ALWAYS inspect vise for stress fatigue or damage to the vise before using.

ALWAYS use vise of proper size and capacity to hold work object.

ALWAYS wear eye, face, and ear protection when using a vise.

ALWAYS wear dust mask or respirator when working with wood, metal, chemical dusts or mists.

ALWAYS rest work piece against front jaw and guide rods.

ALWAYS wear restrictive hair covering and anti slip footwear while operating vise.

ALWAYS only hand tighten vise.

ALWAYS maintain the vise – grease main screw regularly.

Never use a hammer, extension pipe, or cheater bar on spindle handle of vise.

NEVER unscrew movable jaw beyond maximum specified opening of vise.

NEVER weld vise to any metal object.

NEVER use a vise to press an object into or out of another object.

NEVER place pressurized containers or combustible materials in vise.

NEVER wear loose clothing or jewelry while operating vise.

NEVER apply extreme heat or prolong heat to the vise as it may alter structural properties.

NEVER tighten work piece at the edge (top or side) of the vise as this may break vise casting

Mount Back Jaw Casting to Workbench

- Pre-drill holes for mounting screws using template provided. Be sure to drill holes straight and deep enough to accommodate the full length of the screw. Use recommended drill sizes only (see template provided).

- It is ***CRITICAL*** that the back jaw casting is mounted firmly and accurately to the workbench surface. ***NO GAPS*** between the casting and the workbench should be present. Use shims as needed. Refer to figure #1 below.

- ***DO NOT*** attach the vise to the end grain side of the workbench. By attaching the vise to the side grain side of the workbench the mounting screw will have a much stronger hold.

- When attaching the back jaw casting to the workbench, take care to ensure there is full contact of the casting to the workbench surface before tightening the mounting screws.

- The vertical portion of the back jaw against the front edge of the workbench and the horizontal portion of the casting on the underside of the bench must have full contact with the workbench. Use shims to eliminate any gaps that may be present.

- Any gaps between the casting and the workbench surface will cause flexing of the casting when tightened down, which could result in failure of the casting. Figure 1.

- MOUNTING HARDWARE: Use the #14 x 1-1/2" Counter-Sink Wood Screws (2) for the front edge mounting holes and the 5/16" x 2-1/2" Lag Screws (2) and the 5/16" Flat Washers (2) for underneath the workbench

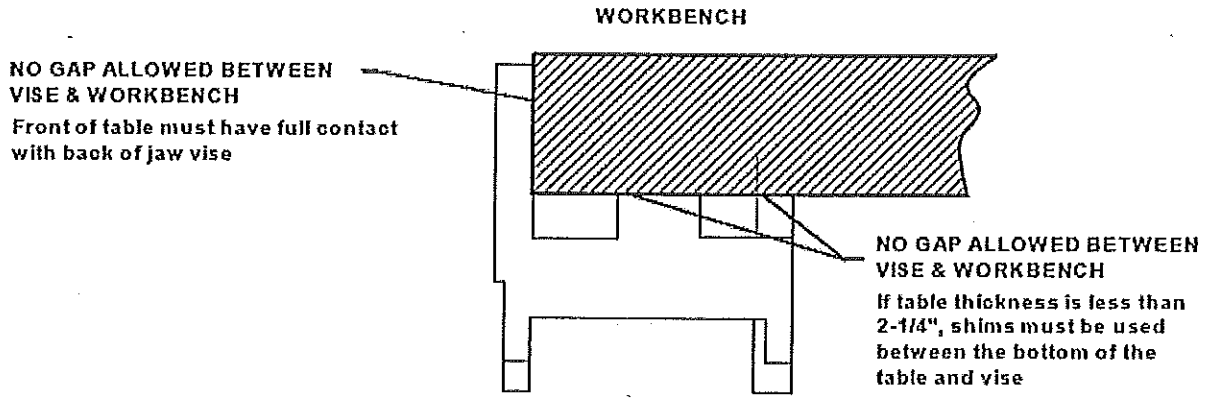

Figure 1: Mount Back Jaw Casting to Work Bench

Caution:

Do not exceed the maximum applied torque of 1,000 inch-pounds (125 foot-pounds). Also, failure to rest work piece against the front jaw and the guide rods may also cause the castings to flex resulting in failure. See Figure 2.

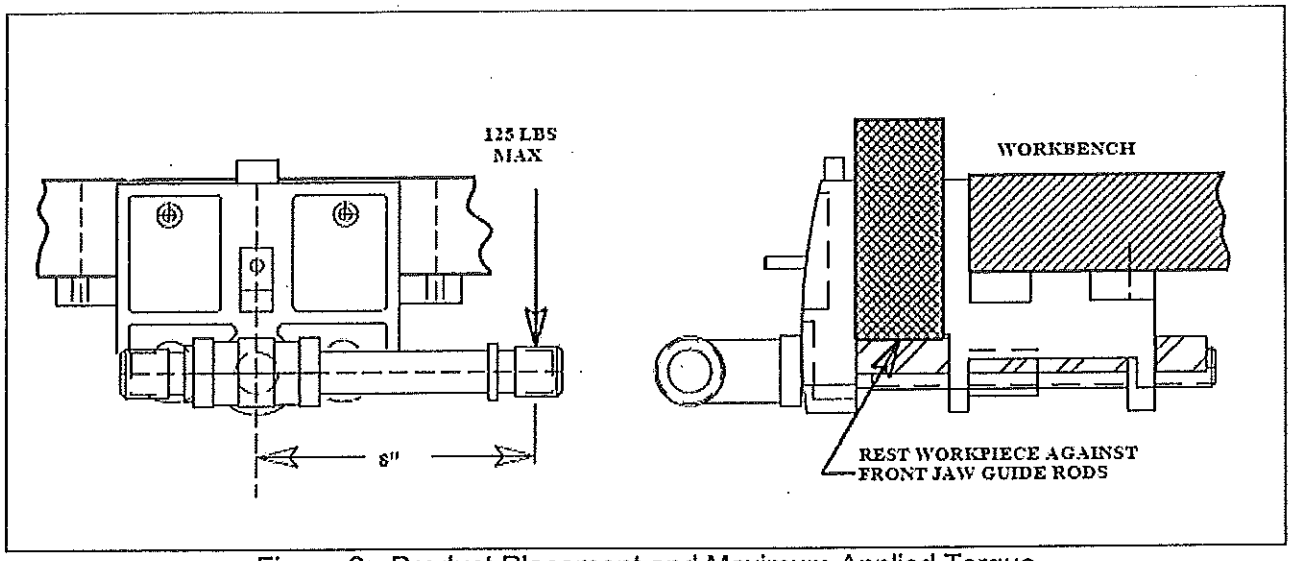

Figure 2: Product Placement and Maximum Applied Torque

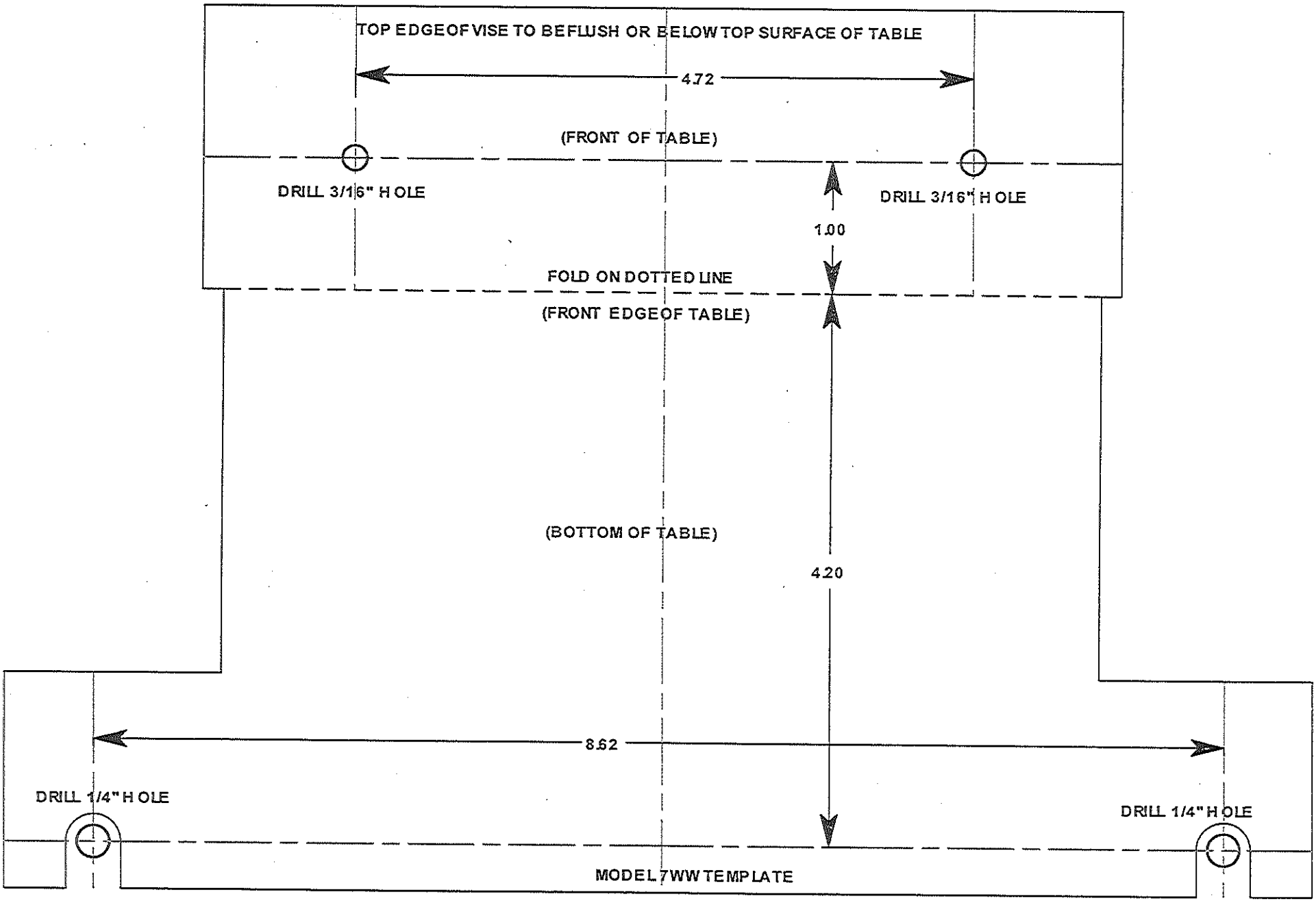
TOP EDGE OF VISE TO BE FLUSH OR BELOW TOP SURFACE OF TABLE
4.72
(FRONT OF TABLE)
DRILL 3/16" HOLE
DRILL 3/16" HOLE
1.00
FOLD ON DOTTED LINE
(FRONT EDGE OF TABLE)
(BOTTOM OF TABLE)
4.20
8.62
DRILL 1/4" HOLE
DRILL 1/4" HOLE
MODEL 7WW TEMPLATE