NOTE: BASE SHOWN MAY NOT BE SAME STYLE AS ORDERED BUT INSTRUCTIONS WILL BE EXACTLY THE SAME

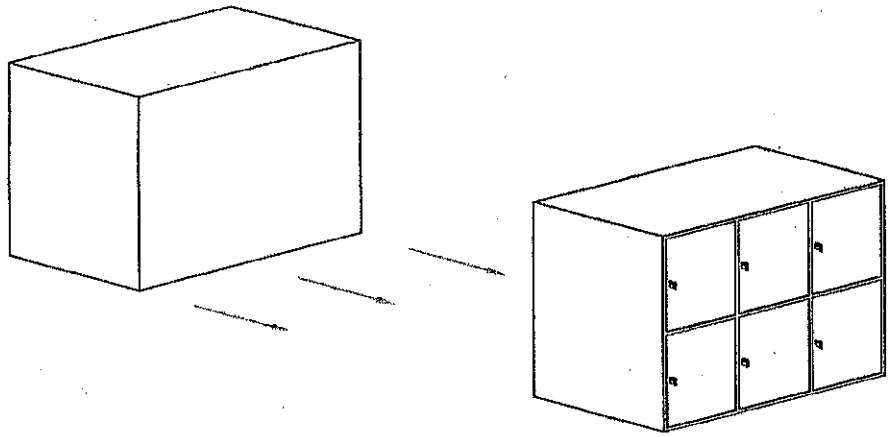

① SLIDE BASES TOGETHER

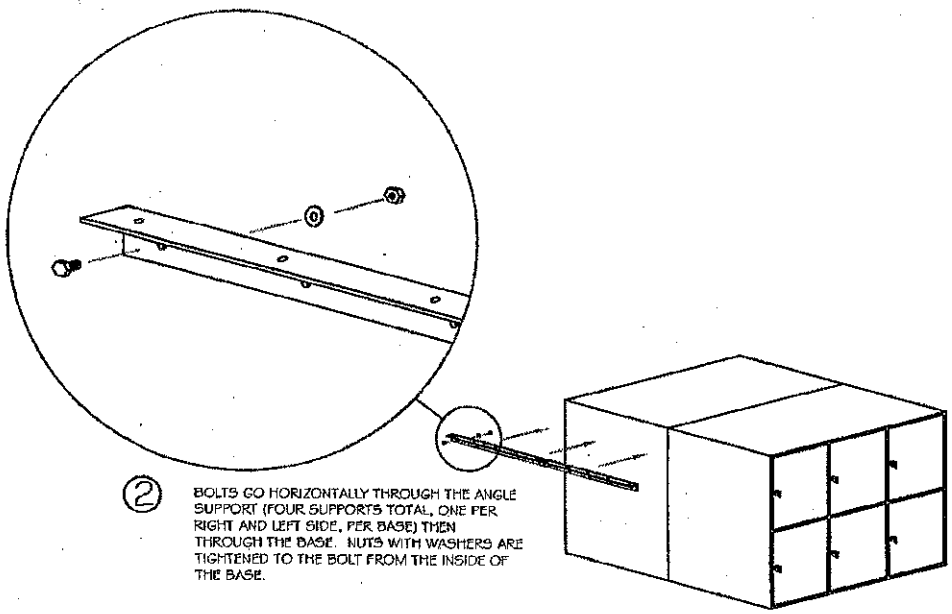

② BOLTS GO HORIZONTALLY THROUGH THE ANGLE SUPPORT (FOUR SUPPORTS TOTAL, ONE PER RIGHT AND LEFT SIDE, PER BASE) THEN THROUGH THE BASE. NUTS WITH WASHERS ARE TIGHTENED TO THE BOLT FROM THE INSIDE OF THE BASE.

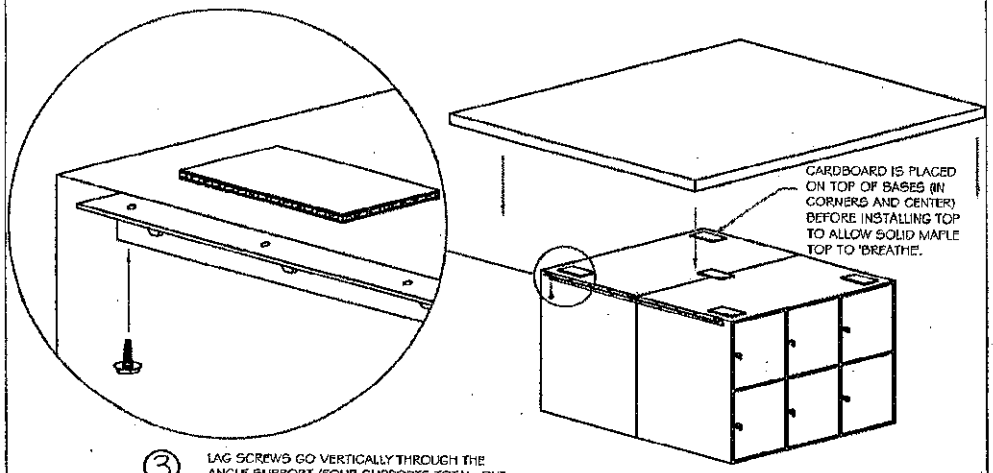

③ LAG SCREWS GO VERTICALLY THROUGH THE ANGLE SUPPORT (FOUR SUPPORTS TOTAL, ONE PER RIGHT AND LEFT SIDE, PER BASE) UP INTO THE TOP. (IF VISES ARE TO BE ATTACHED TO THE UNIT, ATTACH VISES BEFORE LAG BOLTING THE TOP TO THE BASE.) HOLES FOR LAG BOLTS MUST BE PREDRILLED INTO THE TOP.

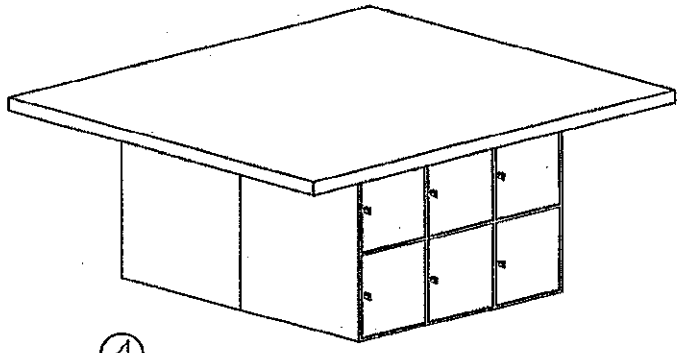

④