WALL STORAGE BENCH

SB-4L & SB-4P

ASSEMBLY INSTRUCTIONS

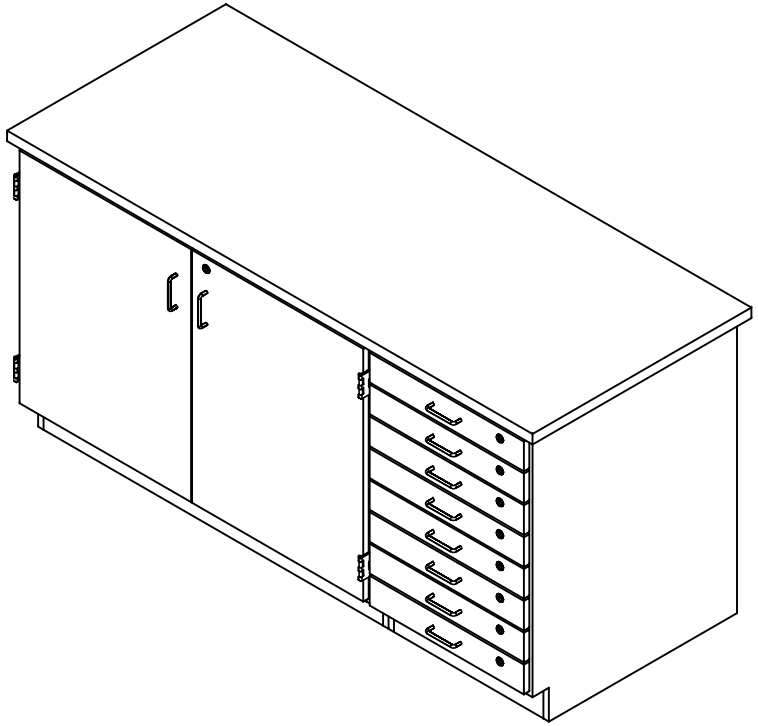

NOTE:

1. MODEL VIEWS MAY NOT REPRESENT EXACT MODEL PURCHASED

DWN BY:	EMK	DWN DATE:	3/7/14
APR BY:		DATE APR:	
APR BY:		DATE APR:	

UNLESS OTHERWISE SPECIFIED DIMENSION ARE IN INCHES

CABINET SQUARENESS ± .0625
FRACTIONAL VALUES ± 1/32"
- ALL VALUES ± OVERALL -

ASSEMBLY INSTRUCTIONS

REV.	DESCRIPTION	DATE	NAME	ECN NO.
A	CREATED ASSEMBLY INSTRUCTIONS	3/7/14	EMK	-

REVISION LEVEL

THIS DRAWING IS THE SOLE PROPERTY OF DIVERSIFIED WOOD CRAFTS. IT MAY NOT BE ALTERED OR CHANGED WITHOUT PERMISSION

DRAWING NUMBER:	SCALE:	SHEET:	REVISION:
SB-4L & SB-4P	NTS	1 OF 3	REV A

TOOLS REQUIRED
SCREW DRIVER
CONTACT CEMENT

ASSEMBLY COMPONENTS

ITEMS INCLUDED	PART #	PART DESCRIPTION	QTY
CABINET ASSEMBLY	WHB-123 X 24	22"W X 28"D X 35"H	1
CABINET ASSEMBLY	DPSC-50	48"W X 28"D X 35"H	1
MAPLE TOP (SB-4L)	100416	TOP,MPL,1.75X30X72	1
SCREWS - MAPLE TOP	100641	SCREW,#8X1¾" QUAD RD WASH HD	8
PLAM TOP (SB-4P)	17-0036	TOP,PLAM,1.25X30X72,ALMOND	1
SCREWS - PLAM TOP	100597	SCREW,#8X1½" QUAD ROUND WASHER	8
CORNER BASE ASSEMBLY	206513	CORNER,BASE,ASSY,SST,2 CORNERS W/ SCREWS	2
RUBBER BASE MOLDING	100283	RUBBER BASE MOLDING (SOLD BY FOOT)	16.333

NOTE:

1. SB-4L = MAPLE TOP, SB-4P = PLAM TOP

DWN BY:	EMK	DWN DATE:	3/7/14	
APR BY:		DATE APR:		
APR BY:		DATE APR:		

UNLESS OTHERWISE SPECIFIED DIMENSION ARE IN INCHES
CABINET SQUARENESS ± .0625
FRACTIONAL VALUES ± 1/32"
- ALL VALUES ± OVERALL -

TOOLS AND ASSEMBLY COMPONENTS

REV.	DESCRIPTION	DATE	NAME	ECN NO.
A	CREATED ASSEMBLY INSTRUCTIONS	3/7/14	EMK	-

REVISION LEVEL

THIS DRAWING IS THE SOLE PROPERTY OF DIVERSIFIED WOOD CRAFTS. IT MAY NOT BE ALTERED OR CHANGED WITHOUT PERMISSION

DRAWING NUMBER:	SCALE:	SHEET:	REVISION:
SB-4L & SB-4P	NTS	2 OF 3	REV A

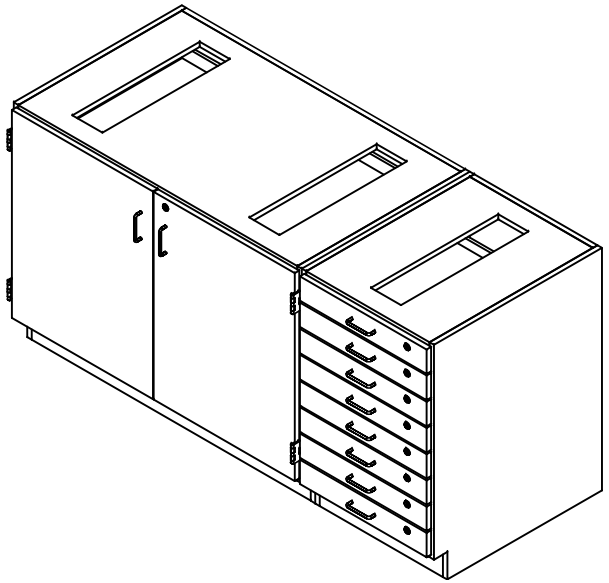

STEP 1:

POSITION THE BASE CABINETS IN DESIRED LOCATION. LEVEL THE CABINETS AND ANCHOR CABINETS TOGETHER. CABINETS MUST BE LEVELED OR DOORS AND DRAWERS MAY NOT OPEN OR CLOSE CORRECTLY .

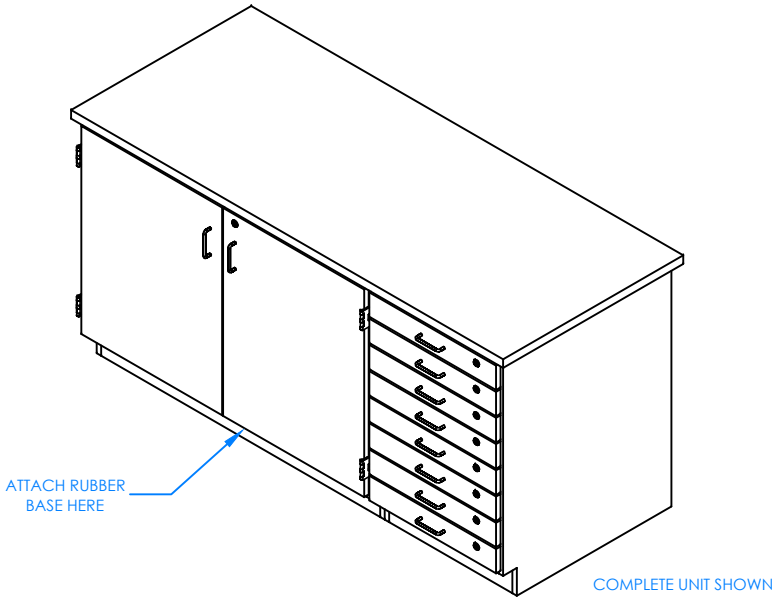

STEP 2:

ATTACH THE TOP TO THE CABINET WITH THE SCREWS PROVIDED. SCREW THROUGH THE INSIDE OF THE CABINET TO THE TOP. MAKE SURE SCREWS ARE TIGHT AND TOP IS SECURE. ATTACH RUBBER MOLDING USING CONTACT CEMENT. AFTER MOLDING IS IN PLACE, SCREW STAINLESS STEEL CORNER BRACKETS ON EACH CORNER OVER THE BASE MOLDING.

NOTE:

1.

DWN BY:	EMK	DWN DATE:	3/7/14
APR BY:		DATE APR:	
APR BY:		DATE APR:	

UNLESS OTHERWISE SPECIFIED DIMENSION ARE IN INCHES
CABINET SQUARENESS ± .0625
FRACTIONAL VALUES ± 1/32"
- ALL VALUES ± OVERALL -

WALL STORAGE BENCH ASSEMBLY INSTRUCTIONS

REV.	DESCRIPTION	DATE	NAME	ECN NO.
A	CREATED ASSEMBLY INSTRUCTIONS	3/7/14	EMK	-

REVISION LEVEL

THIS DRAWING IS THE SOLE PROPERTY OF DIVERSIFIED WOOD CRAFTS. IT MAY NOT BE ALTERED OR CHANGED WITHOUT PERMISSION

DRAWING NUMBER:	SCALE:	SHEET:	REVISION:
SB-4L & SB-4P	NTS	3 OF 3	REV A