IN HOUSE ASSEMBLY TEMPLATE



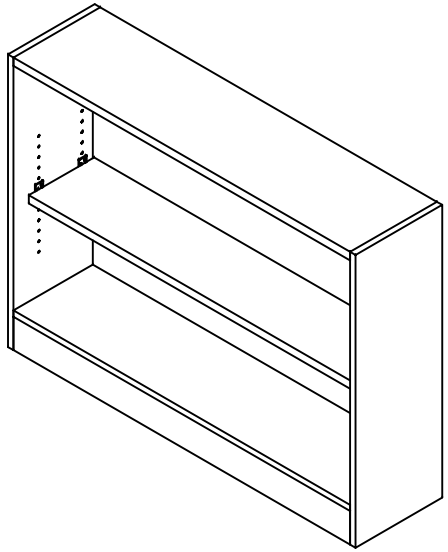

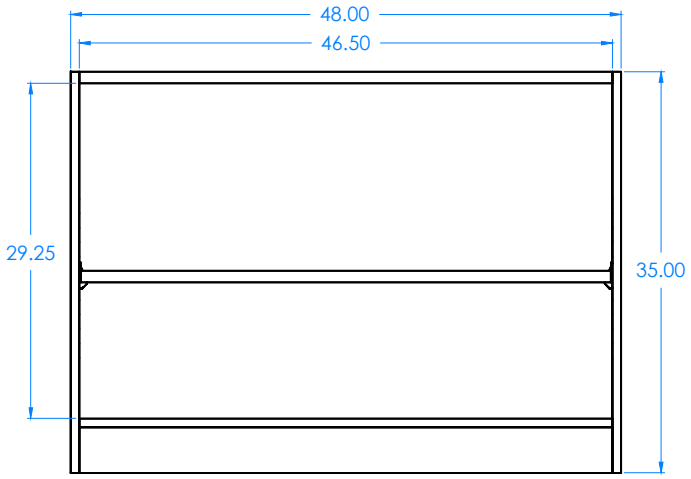

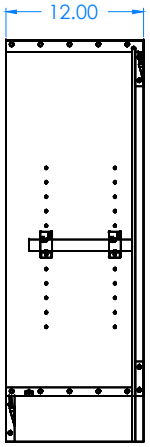

NOTE:

1. PART # SHOWN IS FOR MAPLE CONSTRUCTION.
   FOR OAK, ADD SUFFIX "K". *e.g. OS-1703K*

REV.	DESCRIPTION	DATE	NAME	ECN NO.
B	UPDATED SHELF DEPTH, CLIP HOLE LOCATIONS & QUANTITIES	8/10/16	JCF	N/A
A	CREATED DRAWING	2/26/13	JCF	N/A
REVISION LEVEL				

DWN BY:	JCF	DWN DATE:	2/26/13
APR BY:		DATE APR:	
APR BY:		DATE APR:	

UNLESS OTHERWISE SPECIFIED DIMENSION ARE IN INCHES
DECIMALS: .X = ± .030
.XX = ± .020
.XXX = ± .010
ANGLES: = ± 1°0'
CABINET SQUARENESS ± .0625

THIS DRAWING IS THE SOLE PROPERTY OF DIVERSIFIED WOOD CRAFTS. IT MAY NOT BE ALTERED OR CHANGED WITHOUT PERMISSION

DIVERSIFIED WOODCRAFTS, INC
300 South Krueger Street
Suring, WI 54174
diversifiedwoodcrafts.com

TITLE:
OPEN SHELF STORAGE - 35"H x 48"W x 12"D
FULL ASSEMBLY

DRAWING NUMBER:	SCALE:	SHEET:	REVISION:
OS-1703	NTS	1 OF 8	REV B

IN HOUSE ASSEMBLY TEMPLATE

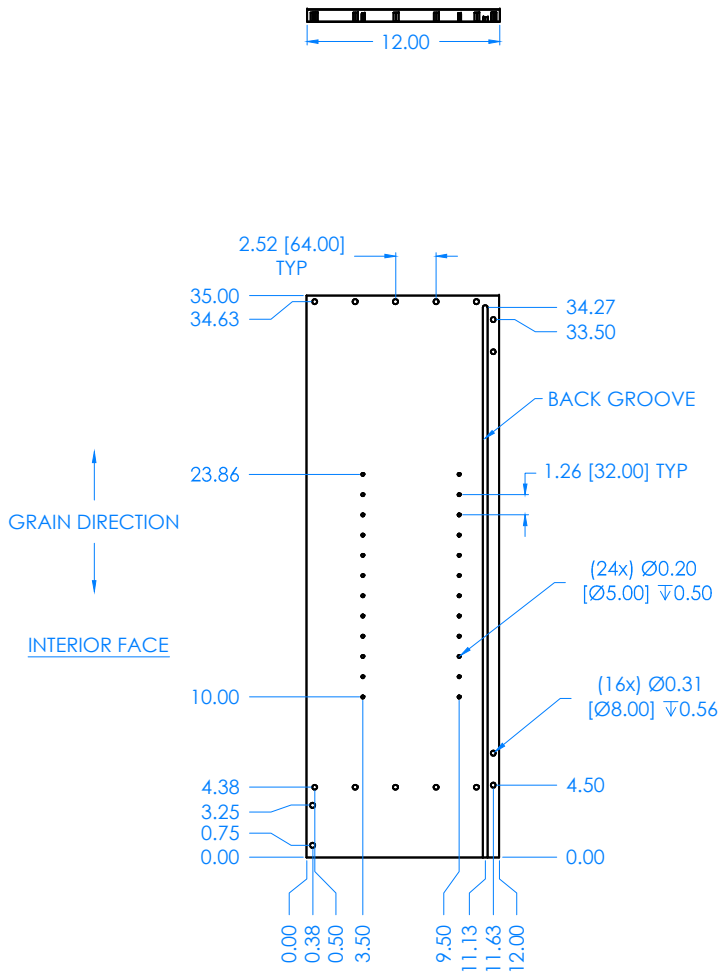

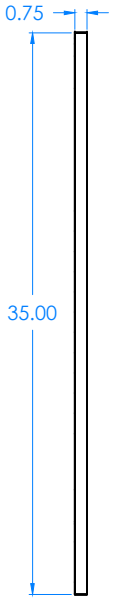

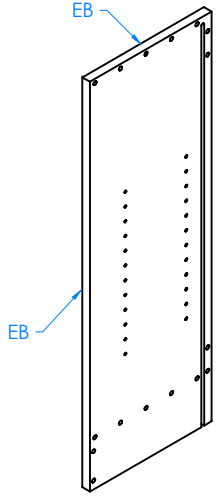

NOTE:

1. QTY (2) PER UNIT - (1) LEFT, (1) RIGHT.
2. LEFT SIDE SHOWN, MIRROR FOR RIGHT.

REV.	DESCRIPTION	DATE	NAME	ECN NO.
B	UPDATED SHELF DEPTH, CLIP HOLE LOCATIONS & QUANTITIES	8/10/16	JCF	N/A
A	CREATED DRAWING	2/26/13	JCF	N/A
REVISION LEVEL				

DWN BY:	JCF	DWN DATE:	2/26/13
APR BY:		DATE APR:	
APR BY:		DATE APR:	

UNLESS OTHERWISE SPECIFIED DIMENSION ARE IN INCHES
DECIMALS: .X = ± .030
.XX = ± .020
.XXX = ± .010
ANGLES: = ± 1°0'
CABINET SQUARENESS ± .0625

THIS DRAWING IS THE SOLE PROPERTY OF DIVERSIFIED WOOD CRAFTS. IT MAY NOT BE ALTERED OR CHANGED WITHOUT PERMISSION

DIVERSIFIED WOODCRAFTS, INC
300 South Krueger Street
Suring, WI 54174
diversifiedwoodcrafts.com

TITLE:
SIDE - 0.75"THK x 12.00"W x 35.00"L

DRAWING NUMBER:	SCALE:	SHEET:	REVISION:
OS-1703	NTS	2 OF 8	REV B

IN HOUSE ASSEMBLY TEMPLATE

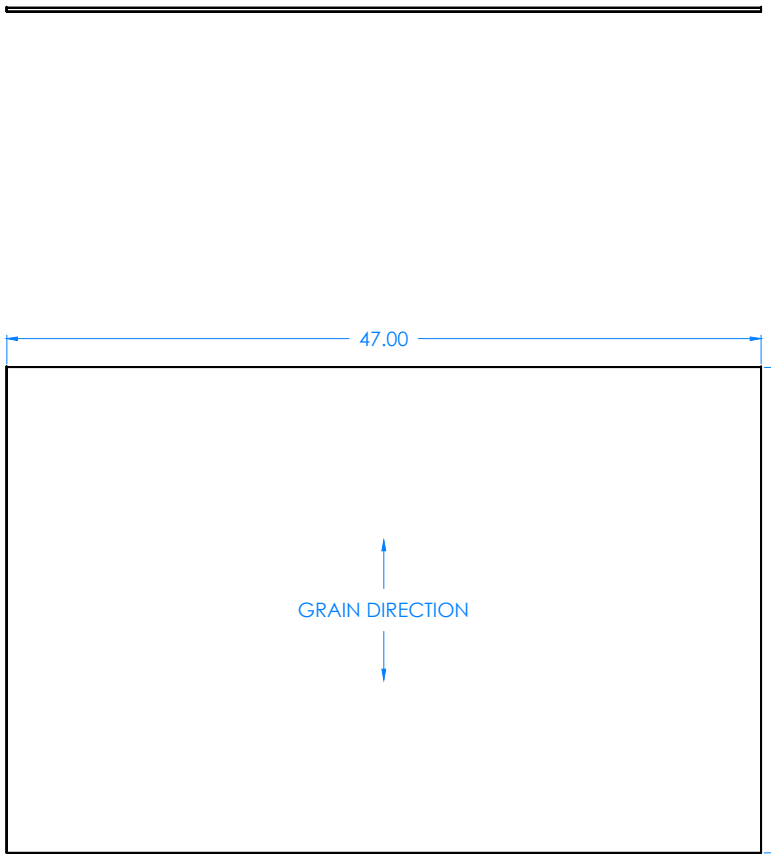

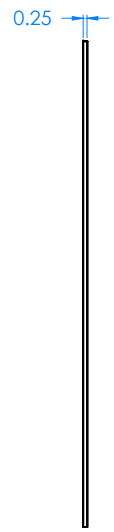

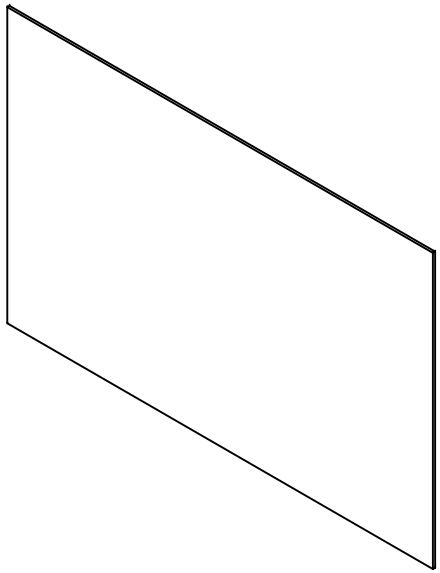

NOTE:

1.

B	UPDATED SHELF DEPTH, CLIP HOLE LOCATIONS & QUANTITIES	8/10/16	JCF	N/A
A	CREATED DRAWING	2/26/13	JCF	N/A
REV.	DESCRIPTION	DATE	NAME	ECN NO.
REVISION LEVEL				

DWN BY:	JCF	DWN DATE:	2/26/13
APR BY:		DATE APR:	
APR BY:		DATE APR:	

UNLESS OTHERWISE SPECIFIED DIMENSION ARE IN INCHES
DECIMALS: .X = ± .030
.XX = ± .020
.XXX = ± .010
ANGLES: = ± 1°0'
CABINET SQUARENESS ± .0625

THIS DRAWING IS THE SOLE PROPERTY OF DIVERSIFIED WOOD CRAFTS. IT MAY NOT BE ALTERED OR CHANGED WITHOUT PERMISSION

DIVERSIFIED WOODCRAFTS, INC
300 South Krueger Street
Suring, WI 54174
diversifiedwoodcrafts.com

TITLE:
BACK - 0.25"THK x 47.00"W x 30.25"L

DRAWING NUMBER:	SCALE:	SHEET:	REVISION:
OS-1703	NTS	3 OF 8	REV B

IN HOUSE ASSEMBLY TEMPLATE

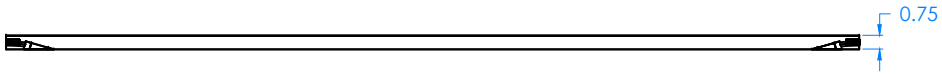

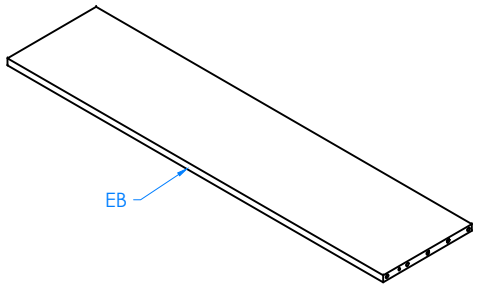

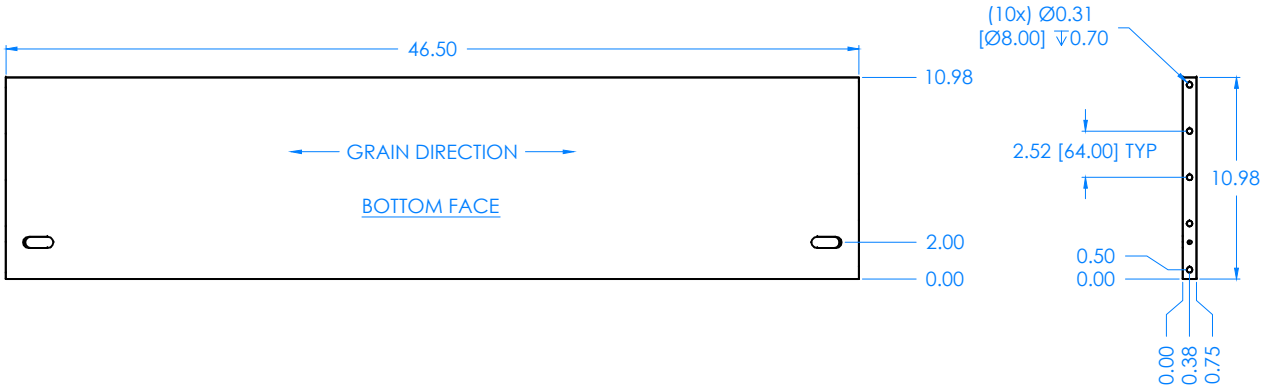

NOTE:

1.

B	UPDATED SHELF DEPTH, CLIP HOLE LOCATIONS & QUANTITIES	8/10/16	JCF	N/A
A	CREATED DRAWING	2/26/13	JCF	N/A
REV.	DESCRIPTION	DATE	NAME	ECN NO.
REVISION LEVEL				

DWN BY:	JCF	DWN DATE:	2/26/13
APR BY:		DATE APR:	
APR BY:		DATE APR:	

UNLESS OTHERWISE SPECIFIED DIMENSION ARE IN INCHES
DECIMALS: .X = ± .030
.XX = ± .020
.XXX = ± .010
ANGLES: = ± 1°0'
CABINET SQUARENESS ± .0625

THIS DRAWING IS THE SOLE PROPERTY OF DIVERSIFIED WOOD CRAFTS. IT MAY NOT BE ALTERED OR CHANGED WITHOUT PERMISSION

DIVERSIFIED WOODCRAFTS, INC

300 South Krueger Street
Suring, WI 54174
diversifiedwoodcrafts.com

TITLE:
BOTTOM - 0.75"THK x 10.98"W x 46.50"L

DRAWING NUMBER:	SCALE:	SHEET:	REVISION:
OS-1703	NTS	4 OF 8	REV B

IN HOUSE ASSEMBLY TEMPLATE



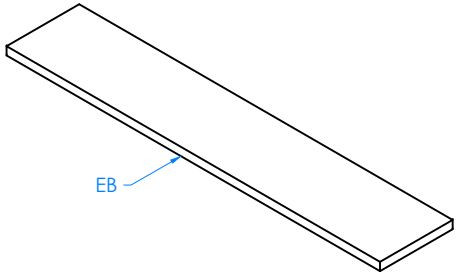

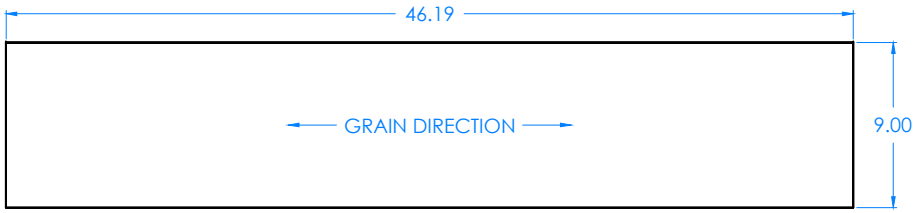

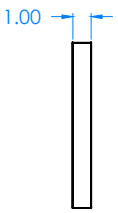

NOTE:

1.

B	UPDATED SHELF DEPTH, CLIP HOLE LOCATIONS & QUANTITIES	8/10/16	JCF	N/A
A	CREATED DRAWING	2/26/13	JCF	N/A
REV.	DESCRIPTION	DATE	NAME	ECN NO.
REVISION LEVEL				

DWN BY:	JCF	DWN DATE:	2/26/13
APR BY:		DATE APR:	
APR BY:		DATE APR:	

UNLESS OTHERWISE SPECIFIED DIMENSION ARE IN INCHES
DECIMALS: .X = ± .030
.XX = ± .020
.XXX = ± .010
ANGLES: = ± 1°0'
CABINET SQUARENESS ± .0625

THIS DRAWING IS THE SOLE PROPERTY OF DIVERSIFIED WOOD CRAFTS. IT MAY NOT BE ALTERED OR CHANGED WITHOUT PERMISSION

DIVERSIFIED WOODCRAFTS, INC
300 South Krueger Street
Suring, WI 54174
diversifiedwoodcrafts.com

TITLE:
ADJUSTABLE SHELF - 1.00"THK x 9.00"W x 46.19"L

DRAWING NUMBER:	SCALE:	SHEET:	REVISION:
OS-1703	NTS	5 OF 8	REV B

IN HOUSE ASSEMBLY TEMPLATE

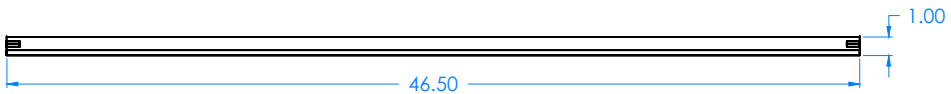

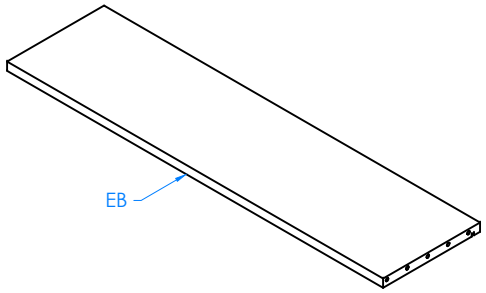

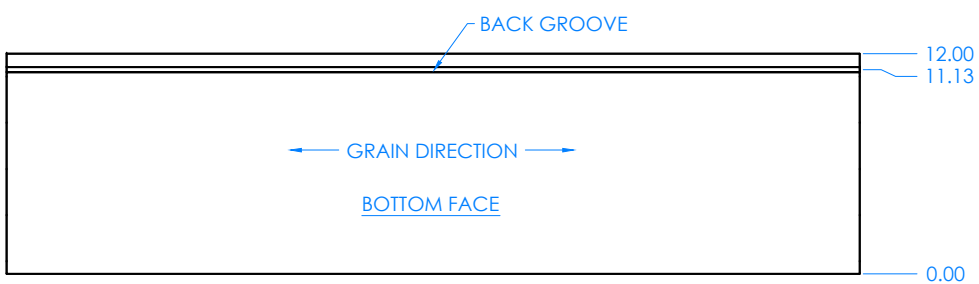

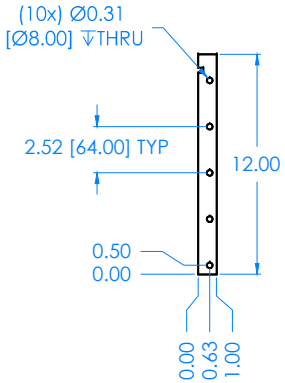

NOTE:

1.

B	UPDATED SHELF DEPTH, CLIP HOLE LOCATIONS & QUANTITIES	8/10/16	JCF	N/A
A	CREATED DRAWING	2/26/13	JCF	N/A
REV.	DESCRIPTION	DATE	NAME	ECN NO.
REVISION LEVEL				

DWN BY:	JCF	DWN DATE:	2/26/13
APR BY:		DATE APR:	
APR BY:		DATE APR:	

UNLESS OTHERWISE SPECIFIED DIMENSION ARE IN INCHES
DECIMALS: .X = ± .030
.XX = ± .020
.XXX = ± .010
ANGLES: = ± 1°0'
CABINET SQUARENESS ± .0625

THIS DRAWING IS THE SOLE PROPERTY OF DIVERSIFIED WOOD CRAFTS. IT MAY NOT BE ALTERED OR CHANGED WITHOUT PERMISSION

DIVERSIFIED WOODCRAFTS, INC
300 South Krueger Street
Suring, WI 54174
diversifiedwoodcrafts.com

TITLE:
TOP - 1.00"THK x 12.00"W x 46.50"L

DRAWING NUMBER:	SCALE:	SHEET:	REVISION:
OS-1703	NTS	6 OF 8	REV B

IN HOUSE ASSEMBLY TEMPLATE

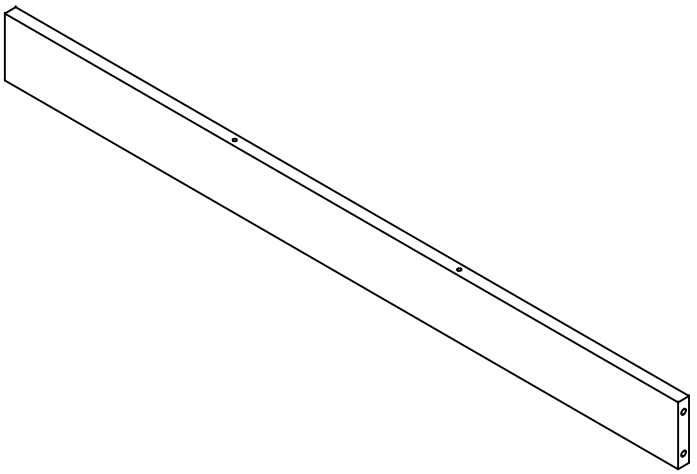

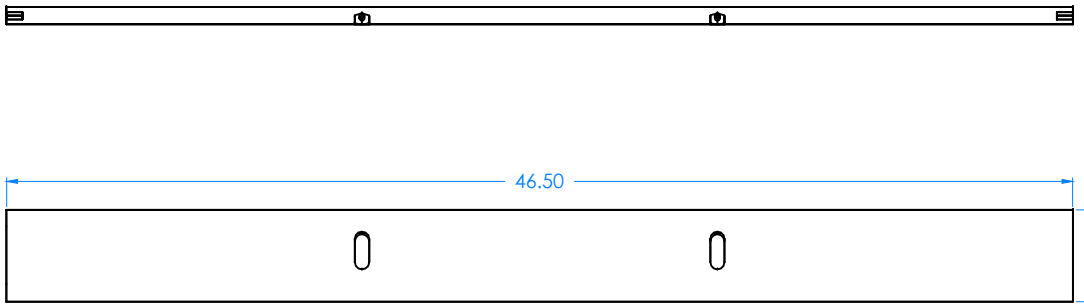

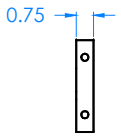

NOTE:

1. SEE REFERENCE DRAWING "TOE KICK - 4IN - DETAIL".

REV.	DESCRIPTION	DATE	NAME	ECN NO.
B	UPDATED SHELF DEPTH, CLIP HOLE LOCATIONS & QUANTITIES	8/10/16	JCF	N/A
A	CREATED DRAWING	2/26/13	JCF	N/A

REVISION LEVEL

DWN BY:	JCF	DWN DATE:	2/26/13
APR BY:		DATE APR:	
APR BY:		DATE APR:	

UNLESS OTHERWISE SPECIFIED DIMENSION ARE IN INCHES
DECIMALS: .X = ± .030
.XX = ± .020
.XXX = ± .010
ANGLES: = ± 1°0'
CABINET SQUARENESS ± .0625

THIS DRAWING IS THE SOLE PROPERTY OF DIVERSIFIED WOOD CRAFTS. IT MAY NOT BE ALTERED OR CHANGED WITHOUT PERMISSION

DIVERSIFIED WOODCRAFTS, INC
300 South Krueger Street
Suring, WI 54174
diversifiedwoodcrafts.com

TITLE:
TOEKICK - 0.75"THK x 4.00"W x 46.50"L

DRAWING NUMBER:	SCALE:	SHEET:	REVISION:
OS-1703	NTS	7 OF 8	REV B

IN HOUSE ASSEMBLY TEMPLATE

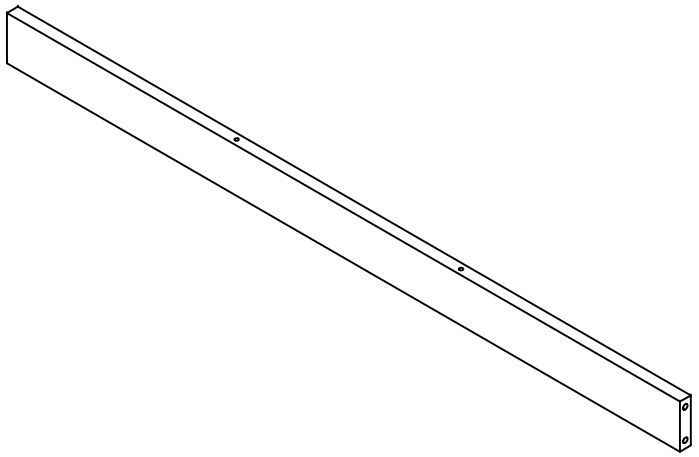

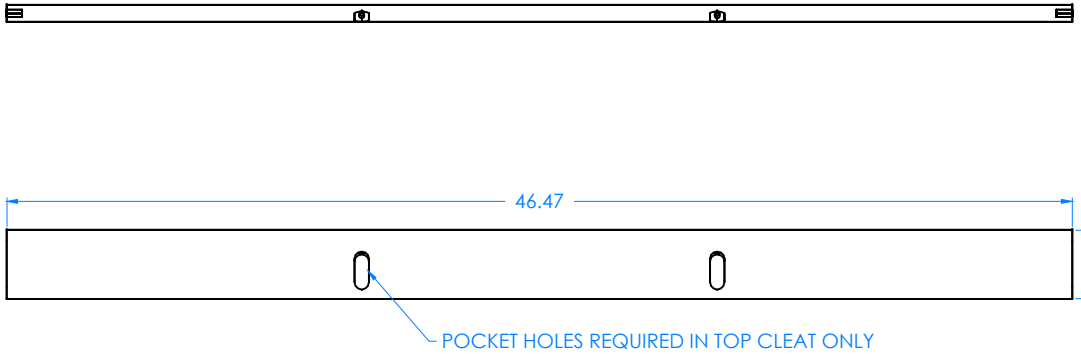

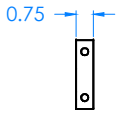

NOTE:

1. QTY (2) PER UNIT.
2. SEE REFERENCE DRAWING "FASTENING CLEAT - 3IN - DETAIL", PHs IN TOP CLEAT ONLY.

REV.	DESCRIPTION	DATE	NAME	ECN NO.
B	UPDATED SHELF DEPTH, CLIP HOLE LOCATIONS & QUANTITIES	8/10/16	JCF	N/A
A	CREATED DRAWING	2/26/13	JCF	N/A

REVISION LEVEL

DWN BY:	JCF	DWN DATE:	2/26/13
APR BY:		DATE APR:	
APR BY:		DATE APR:	

UNLESS OTHERWISE SPECIFIED DIMENSION ARE IN INCHES
DECIMALS: .X = ± .030
.XX = ± .020
.XXX = ± .010
ANGLES: = ± 1°0'
CABINET SQUARENESS ± .0625

THIS DRAWING IS THE SOLE PROPERTY OF DIVERSIFIED WOOD CRAFTS. IT MAY NOT BE ALTERED OR CHANGED WITHOUT PERMISSION

DIVERSIFIED WOODCRAFTS, INC
300 South Krueger Street
Suring, WI 54174
diversifiedwoodcrafts.com

TITLE:
FASTENING CLEAT - 0.75"THK x 3.00"W x 46.47"L

DRAWING NUMBER:	SCALE:	SHEET:	REVISION:
OS-1703	NTS	8 OF 8	REV B