MOBILE STORAGE CABINET

EMDC-2436C, EDMC-2436M, MDC-2436C, & MDC-2436M SERIES
ASSEMBLY INSTRUCTIONS

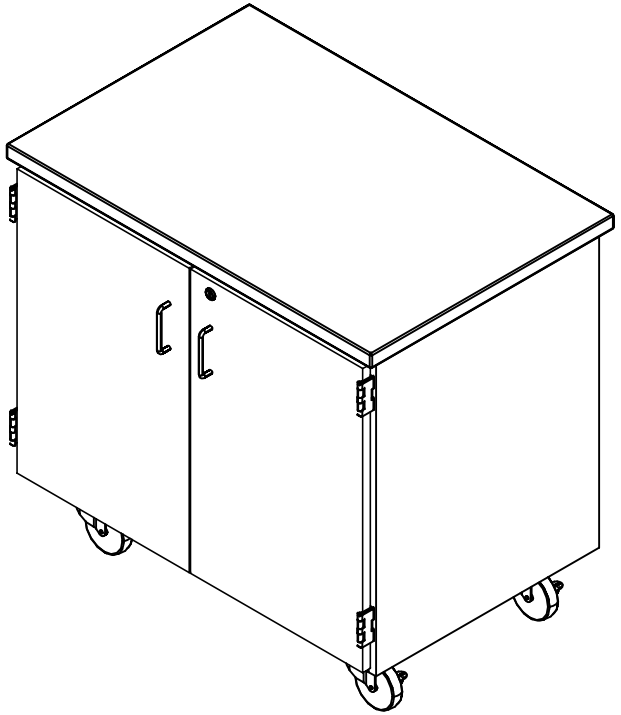

NOTE:

1. MODEL VIEWS MAY NOT REPRESENT EXACT MODEL PURCHASED

DWN BY:	EMK	DWN DATE:	11/12/14
APR BY:		DATE APR:	
APR BY:		DATE APR:	

UNLESS OTHERWISE SPECIFIED DIMENSION ARE IN INCHES
CABINET SQUARENESS ± .0625
FRACTIONAL VALUES ± 1/32"
- ALL VALUES ± OVERALL -

MOBILE STORAGE CABINET
ASSEMBLY INSTRUCTIONS

REV.	DESCRIPTION	DATE	NAME	ECN NO.
A	CREATED ASSEMBLY INSTRUCTIONS	11/12/14	EMK	-

REVISION LEVEL

THIS DRAWING IS THE SOLE PROPERTY OF DIVERSIFIED WOOD CRAFTS. IT MAY NOT BE ALTERED OR CHANGED WITHOUT PERMISSION

DRAWING NUMBER:	SCALE:	SHEET:	REVISION:
MOBILE STORAGE CABINET	NTS	1 OF 3	REV A

TOOLS REQUIRED
½" WRENCH
ADJUSTABLE PLIERS

ASSEMBLY COMPONENTS

ITEMS INCLUDED	PART #	PART DESCRIPTION	QTY
CASTERS	100081	CASTER,4IN SWIVEL TOP PLATE, W/BRAKE	4
CASTER HARDWARE KIT	206509	CASTER,ASSY,HDWRE,16-SCREWS, 16-NUTS	1
SHELF CLIPS	100027	SHELF CLIPS,PLASTIC,5MM PIN	4

NOTE:

1. TOPS ARE EITHER CHEMGUARD OR MAPLE.

DWN BY:	EMK	DWN DATE:	11/12/14
APR BY:		DATE APR:	
APR BY:		DATE APR:	

UNLESS OTHERWISE SPECIFIED DIMENSION ARE IN INCHES
CABINET SQUARENESS ± .0625
FRACTIONAL VALUES ± 1/32"
- ALL VALUES ± OVERALL -

TOOLS AND ASSEMBLY COMPONENTS

REV.	DESCRIPTION	DATE	NAME	ECN NO.
A	CREATED ASSEMBLY INSTRUCTIONS	11/12/14	EMK	-

REVISION LEVEL

THIS DRAWING IS THE SOLE PROPERTY OF DIVERSIFIED WOOD CRAFTS. IT MAY NOT BE ALTERED OR CHANGED WITHOUT PERMISSION

DRAWING NUMBER:	SCALE:	SHEET:	REVISION:
MOBILE STORAGE CABINET	NTS	2 OF 3	REV A

IN HOUSE ASSEMBLY TEMPLATE

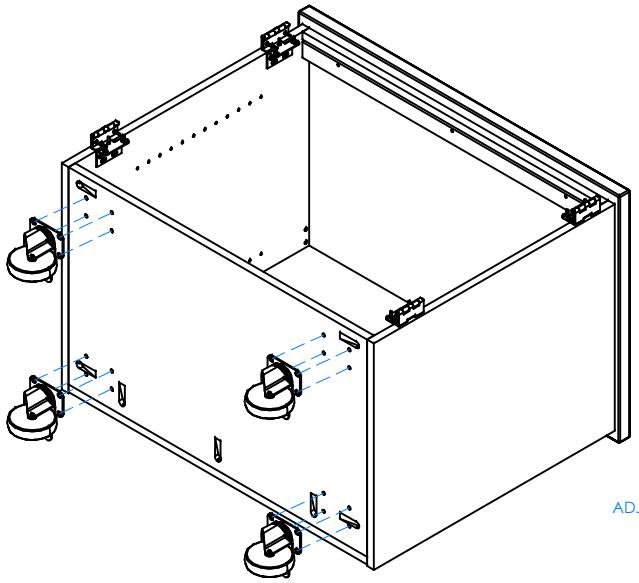

DOORS REMOVED TO SHOW CLARITY

STEP 1:

LAY CABINET ON BACK. ATTACH CASTERS FROM INSIDE THE CABINET USING THE HARDWARE PROVIDED.

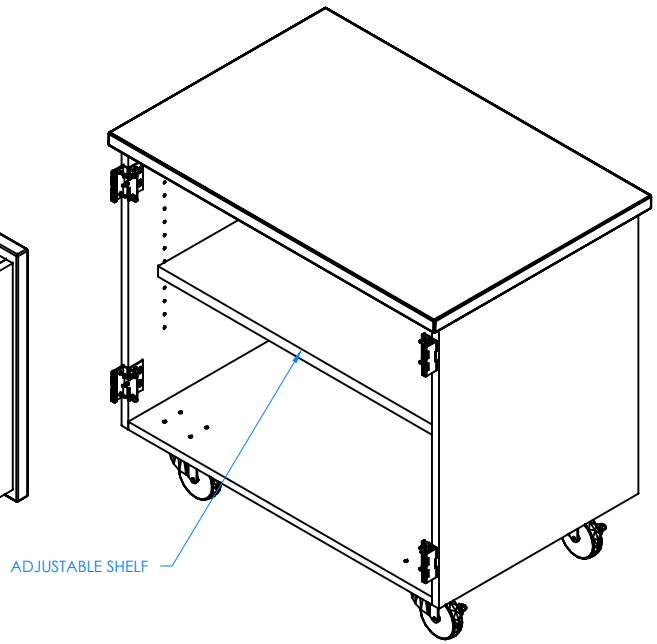

DOORS REMOVED TO SHOW CLARITY

STEP 2:

TIP CABINET UP. INSERT SHELF CLIPS IN DESIRED LOCATION. PLACE SHELF ON CLIPS, MAKING SURE IT IS LEVEL.

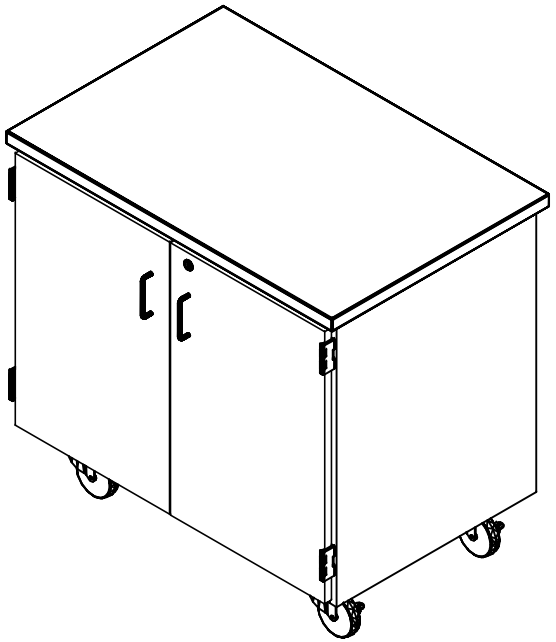

COMPLETE UNIT SHOWN

STEP 3:

PLACE IN DESIRED LOCATION.

NOTE:

1.

A	CREATED ASSEMBLY INSTRUCTIONS	11/12/14	EMK	-
REV.	DESCRIPTION	DATE	NAME	ECN NO.
REVISION LEVEL				

DWN BY:	EMK	DWN DATE:	11/12/14
APR BY:		DATE APR:	
APR BY:		DATE APR:	

UNLESS OTHERWISE SPECIFIED DIMENSION ARE IN INCHES

CABINET SQUARENESS ± .0625
FRACTIONAL VALUES ± 1/32"
- ALL VALUES ± OVERALL -

THIS DRAWING IS THE SOLE PROPERTY OF DIVERSIFIED WOOD CRAFTS. IT MAY NOT BE ALTERED OR CHANGED WITHOUT PERMISSION

ASSEMBLY INSTRUCTIONS

DRAWING NUMBER:	SCALE:	SHEET:	REVISION:
MOBILE STORAGE CABINET	NTS	3 OF 3	REV A

DWG To PDF.pc3