IN HOUSE ASSEMBLY TEMPLATE

# LEARNING PLUS WALL

## LW-8 (OAK OR MAPLE)

## ASSEMBLY INSTRUCTIONS

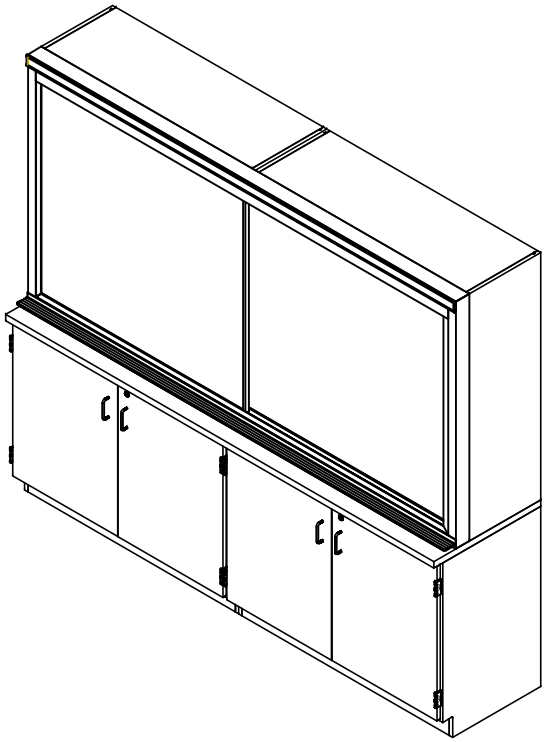

NOTE:

1. MODEL VIEWS MAY NOT REPRESENT EXACT MODEL PURCHASED

| | | | | |
|---|---|---|---|---|
| DWN BY: | EMK | DWN DATE: | 3/4/14 | |
| APR BY: | | DATE APR: | | |
| APR BY: | | DATE APR: | | |

UNLESS OTHERWISE SPECIFIED DIMENSION ARE IN INCHES

CABINET SQUARENESS ± .0625
FRACTIONAL VALUES ± 1/32"
- ALL VALUES ± OVERALL -

LEARNING PLUS WALL
ASSEMBLY INSTRUCTIONS

| REV. | DESCRIPTION | DATE | NAME | ECN NO. |
|---|---|---|---|---|
| A | CREATED ASSEMBLY INSTRUCTIONS | 3/4/14 | EMK | - |

REVISION LEVEL

THIS DRAWING IS THE SOLE PROPERTY OF DIVERSIFIED WOOD CRAFTS. IT MAY NOT BE ALTERED OR CHANGED WITHOUT PERMISSION

| DRAWING NUMBER: | SCALE: | SHEET: | REVISION: |
|---|---|---|---|
| LW-8 | NTS | 1 OF 5 | REV A |

| TOOLS REQUIRED |
|---|
| SCREW DRIVER |
| CONTACT CEMENT |

## ASSEMBLY COMPONENTS

| ITEMS INCLUDED | PART # | PART DESCRIPTION | QTY |
|---|---|---|---|
| CABINET ASSEMBLY | N/A | B03 - 35H X 48W X 22D | 2 |
| CABINET ASSEMBLY | N/A | G01 - 48H X 48W X 16D | 2 |
| TOP | 249318F | TOP,PLAM,1.25X24X96,BLK,FLAT | 1 |
| CORNER BASE ASSEMBLY | 206513 | CORNER,BASE,ASSY,2CORNER W/ SCREWS | 1 |
| RUBBER BASE MOLDING | 100283 | RUBBER BASE MOLDING (SOLD BY FOOT) | 11.29 |
| MARKER BOARD | 249162 | MARKER BOARD UNIT, 8' X 4' | 1 |
| SCREWS - TOP | 100597 | SCREW,#8X1½" QUAD ROUND WASHER | 12 |

NOTE:

1.

| | | | | |
|---|---|---|---|---|
| DWN BY: | EMK | DWN DATE: | 3/4/14 | |
| APR BY: | | DATE APR: | | |
| APR BY: | | DATE APR: | | |

UNLESS OTHERWISE SPECIFIED DIMENSION ARE IN INCHES
CABINET SQUARENESS ± .0625
FRACTIONAL VALUES ± 1/32"
- ALL VALUES ± OVERALL -

TOOLS AND ASSEMBLY COMPONENTS

| REV. | DESCRIPTION | DATE | NAME | ECN NO. |
|---|---|---|---|---|
| A | CREATED ASSEMBLY INSTRUCTIONS | 3/4/14 | EMK | - |

REVISION LEVEL

THIS DRAWING IS THE SOLE PROPERTY OF DIVERSIFIED WOOD CRAFTS. IT MAY NOT BE ALTERED OR CHANGED WITHOUT PERMISSION

| DRAWING NUMBER: | SCALE: | SHEET: | REVISION: |
|---|---|---|---|
| LW-8 | NTS | 2 OF 5 | REV A |

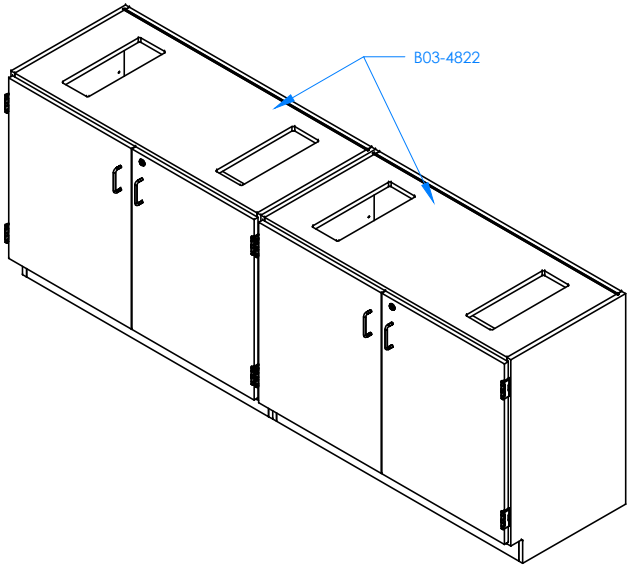


STEP 1:

POSITION THE BASE CABINETS IN YOUR DESIRED LOCATION. LEVEL CABINETS. ANCHOR CABINETS TO EACH OTHER. CABINETS MUST BE LEVELED OR DOORS MAY NOT OPEN OR CLOSE CORRECTLY . ANCHOR CABINETS TO THE WALL.

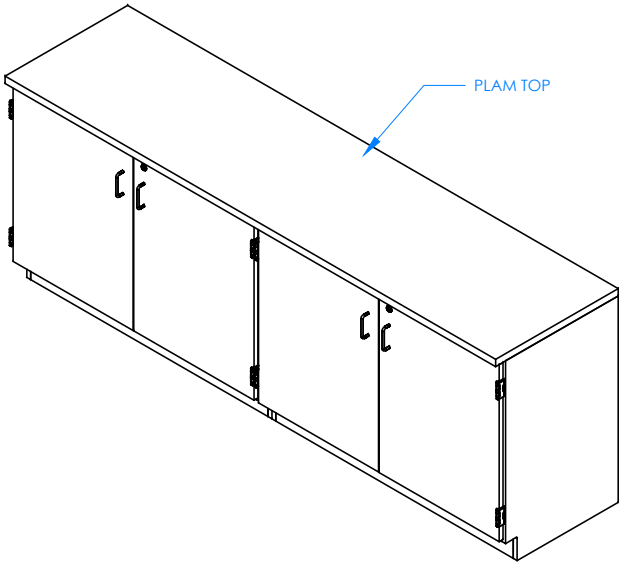


STEP 2:

ATTACH THE TOP TO THE BASE CABINETS WITH THE SCREWS PROVIDED FROM INSIDE THE CABINET. TOP MUST BE FLUSH WITH BACK AND SIDES.

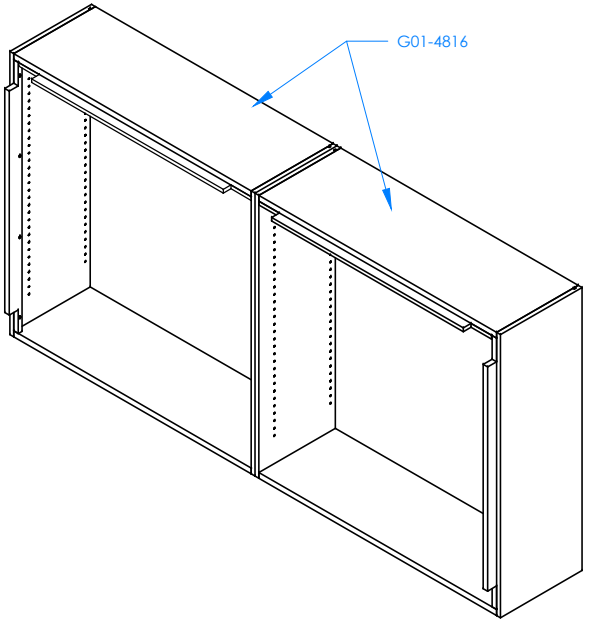


STEP 3:

ANCHOR THE TWO WALL CABINETS TOGETHER.

NOTE:

1.

| | | | | |
|---|---|---|---|---|
| A | CREATED ASSEMBLY INSTRUCTIONS | 3/4/14 | EMK | - |
| REV. | DESCRIPTION | DATE | NAME | ECN NO. |
| REVISION LEVEL | | | | |

| | | | |
|---|---|---|---|
| DWN BY: | EMK | DWN DATE: | 3/4/14 |
| APR BY: | | DATE APR: | |
| APR BY: | | DATE APR: | |

UNLESS OTHERWISE SPECIFIED DIMENSION ARE IN INCHES
CABINET SQUARENESS ± .0625
FRACTIONAL VALUES ± 1/32"
- ALL VALUES ± OVERALL -

THIS DRAWING IS THE SOLE PROPERTY OF DIVERSIFIED WOOD CRAFTS. IT MAY NOT BE ALTERED OR CHANGED WITHOUT PERMISSION

LEARNING PLUS WALL ASSEMBLY INSTRUCTIONS

| DRAWING NUMBER: | SCALE: | SHEET: | REVISION: |
|---|---|---|---|
| LW-8 | NTS | 3 OF 5 | REV A |

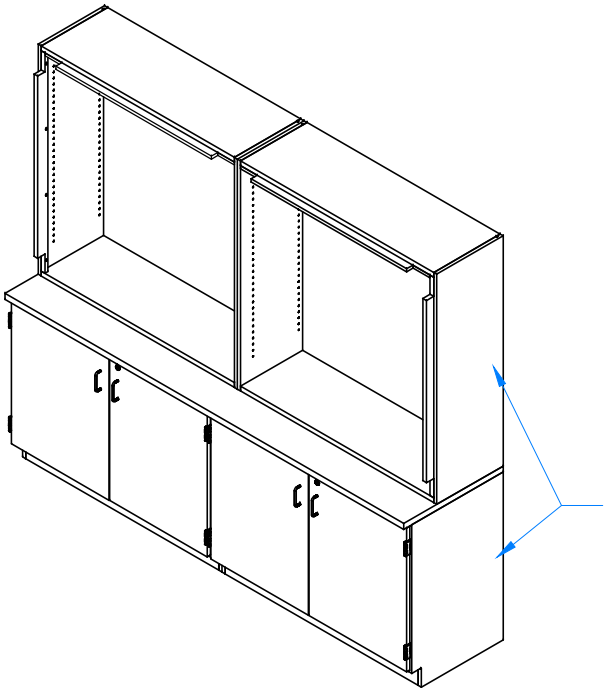


STEP 4:

POSITION THE WALL CABINETS ON TOP OF THE PLAM TOP, MAKING SURE BACK AND SIDES ARE FLUSH WITH BACK AND SIDES OF BASE CABINET. ONCE IN CORRECT LOCATION, ANCHOR WALL CABINETS TO THE WALL.

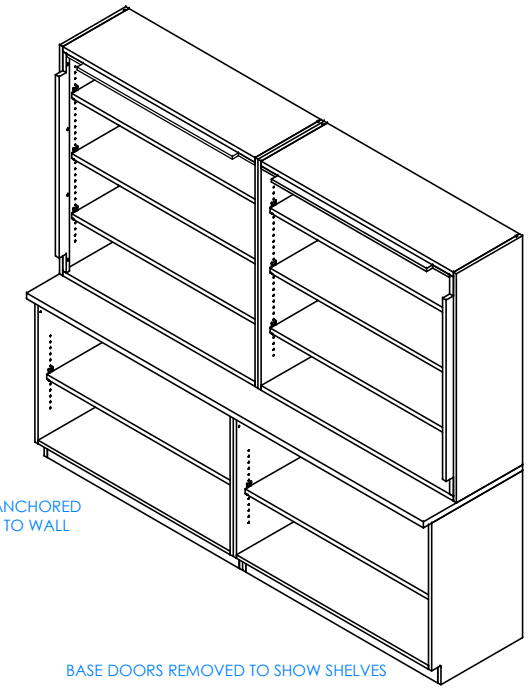


STEP 5:

ADD SHELF PINS AND SHELVES TO THE WALL AND BASE CABINETS.

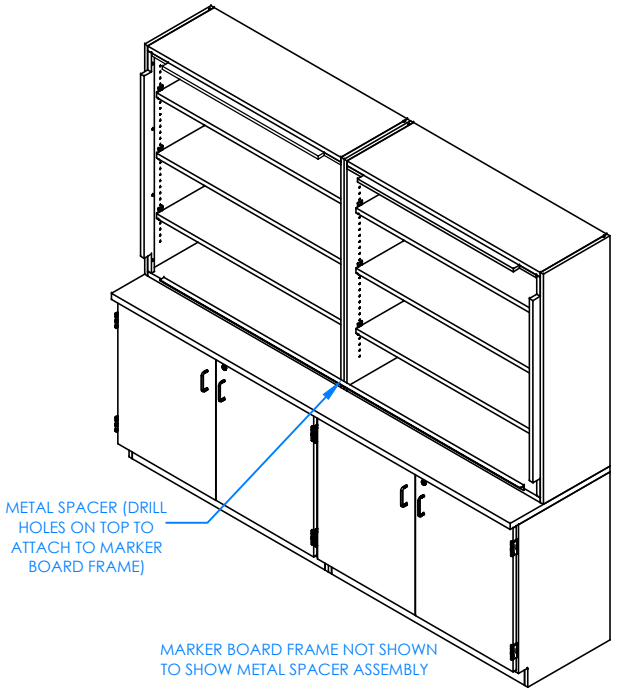


STEP 6:

DRILL ⅛" HOLES ON THE TOP OF THE METAL SPACER TO BE ATTACHED TO THE BOTTOM OF THE MARKER BOARD FRAME. ATTACH WITH SCREWS (NOT PROVIDED). ATTACH THE MARKER BOARD FRAME TO THE CLEATS OF THE WALL CABINETS (SIDES AND TOP). DRILL 3/16" HOLES TO THE METAL FRAME OF THE MARKER BOARD INTO THE CLEATS. ATTACH WITH SCREWS (NOT PROVIDED).

NOTE:

1.

| | | | | |
|---|---|---|---|---|
| A | CREATED ASSEMBLY INSTRUCTIONS | 3/4/14 | EMK | - |
| REV. | DESCRIPTION | DATE | NAME | ECN NO. |
| REVISION LEVEL | | | | |

| | | | |
|---|---|---|---|
| DWN BY: | EMK | DWN DATE: | 3/4/14 |
| APR BY: | | DATE APR: | |
| APR BY: | | DATE APR: | |

UNLESS OTHERWISE SPECIFIED DIMENSION ARE IN INCHES
CABINET SQUARENESS ± .0625
FRACTIONAL VALUES ± 1/32"
- ALL VALUES ± OVERALL -

THIS DRAWING IS THE SOLE PROPERTY OF DIVERSIFIED WOOD CRAFTS. IT MAY NOT BE ALTERED OR CHANGED WITHOUT PERMISSION

LEARNING PLUS WALL ASSEMBLY INSTRUCTIONS

| DRAWING NUMBER: | SCALE: | SHEET: | REVISION: |
|---|---|---|---|
| LW-8 | NTS | 4 OF 5 | REV A |

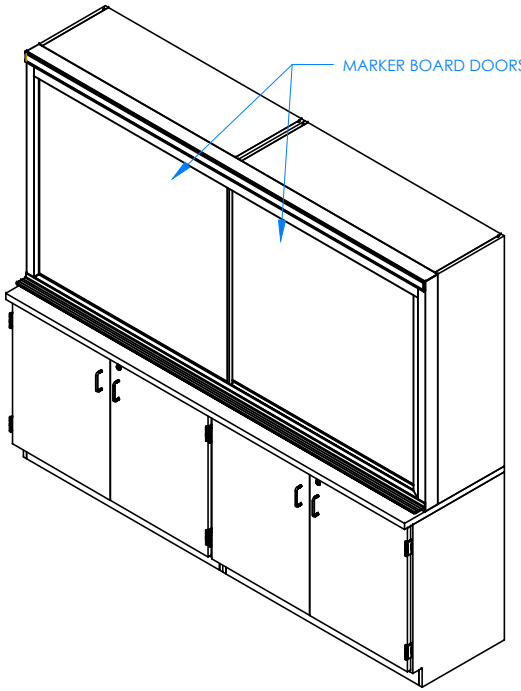


STEP 7:

ATTACH MARKER BOARD DOORS TO THE FRAME.

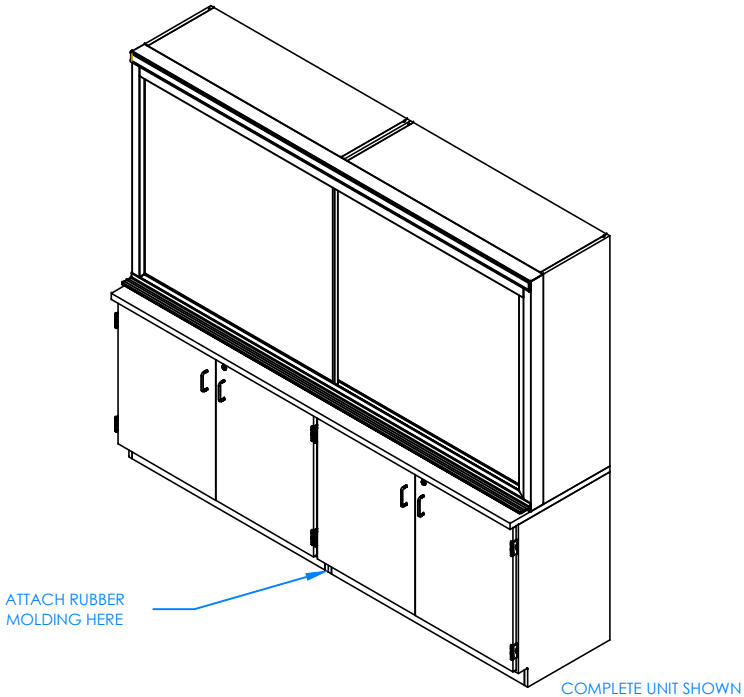


STEP 8:

ATTACH RUBBER MOLDING USING CONTACT CEMENT. AFTER MOLDING IS IN PLACE, SCREW STAINLESS STEEL CORNER BRACKETS ON EACH CORNER OVER THE BASE MOLDING.

NOTE:

1.

| | | | | |
|---|---|---|---|---|
| A | CREATED ASSEMBLY INSTRUCTIONS | 3/4/14 | EMK | - |
| REV. | DESCRIPTION | DATE | NAME | ECN NO. |
| REVISION LEVEL | | | | |

| | | | |
|---|---|---|---|
| DWN BY: | EMK | DWN DATE: | 3/4/14 |
| APR BY: | | DATE APR: | |
| APR BY: | | DATE APR: | |

UNLESS OTHERWISE SPECIFIED DIMENSION ARE IN INCHES

CABINET SQUARENESS ± .0625
FRACTIONAL VALUES ± 1/32"
- ALL VALUES ± OVERALL -

THIS DRAWING IS THE SOLE PROPERTY OF DIVERSIFIED WOOD CRAFTS. IT MAY NOT BE ALTERED OR CHANGED WITHOUT PERMISSION

ASSEMBLY INSTRUCTIONS

| DRAWING NUMBER: | SCALE: | SHEET: | REVISION: |
|---|---|---|---|
| LW-8 | NTS | 5 OF 5 | REV A |