IN HOUSE ASSEMBLY TEMPLATE

FLAT FILE STORAGE

FFS-3624 (OAK OR MAPLE)

ASSEMBLY INSTRUCTIONS

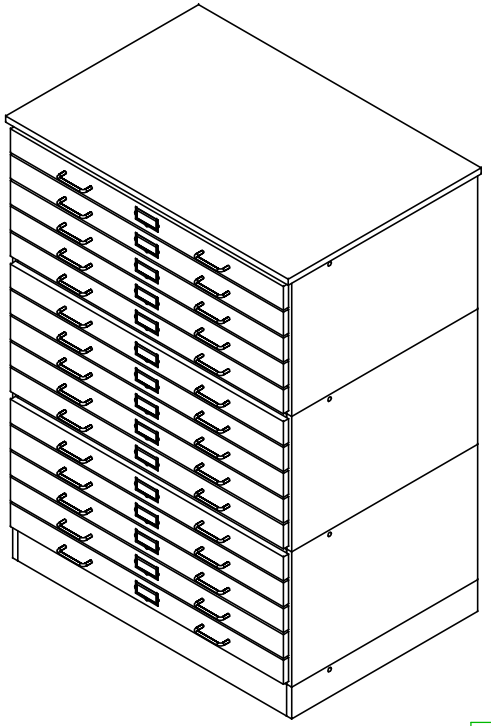

NOTE:

1. MODEL VIEWS MAY NOT REPRESENT EXACT MODEL PURCHASED

REV.	DESCRIPTION	DATE	NAME	ECN NO.
B	ADDED UPDATED DRAWING AND INSTRUCTIONS	8/15/14	EMK	-
A	CREATED ASSEMBLY INSTRUCTIONS	1/2/14	EMK	-

REVISION LEVEL

DWN BY:	EMK	DWN DATE:	1/2/14
APR BY:		DATE APR:	
APR BY:		DATE APR:	

UNLESS OTHERWISE SPECIFIED DIMENSION ARE IN INCHES

CABINET SQUARENESS ± .0625
FRACTIONAL VALUES ± 1/32"
- ALL VALUES ± OVERALL -

THIS DRAWING IS THE SOLE PROPERTY OF DIVERSIFIED WOOD CRAFTS. IT MAY NOT BE ALTERED OR CHANGED WITHOUT PERMISSION

ASSEMBLY INSTRUCTIONS

DRAWING NUMBER:	SCALE:	SHEET:	REVISION:
FFS-3624	NTS	1 OF 4	REV B

TOOLS REQUIRED

ALLEN KEY,7MM GIRO BOLT LOCK - SUPPLIED (PART # 212177)
SCREW DRIVER
CONTACT CEMENT

ASSEMBLY COMPONENTS

ITEMS INCLUDED	PART #	PART DESCRIPTION	QTY
RUBBER MOLDING	100283	RUBBER BASE MOLDING (SOLD BY FOOT)	11.25
CORNER BASE ASSEMBLY	100057	CORNERS-STAINLESS STEEL, BASE	4
SCREWS - STAINLESS STEEL CORNERS	100064	SCREW,#6X½ PTH SMS SS SCREW	16

NOTE:

1.

REV.	DESCRIPTION	DATE	NAME	ECN NO.
B	ADDED UPDATED DRAWING AND INSTRUCTIONS	8/15/14	EMK	-
A	CREATED ASSEMBLY INSTRUCTIONS	1/2/14	EMK	-

REVISION LEVEL

DWN BY:	EMK	DWN DATE:	1/2/14
APR BY:		DATE APR:	
APR BY:		DATE APR:	

UNLESS OTHERWISE SPECIFIED DIMENSION ARE IN INCHES
CABINET SQUARENESS ± .0625
FRACTIONAL VALUES ± 1/32"
- ALL VALUES ± OVERALL -

THIS DRAWING IS THE SOLE PROPERTY OF DIVERSIFIED WOOD CRAFTS. IT MAY NOT BE ALTERED OR CHANGED WITHOUT PERMISSION

TOOLS AND ASSEMBLY COMPONENTS

DRAWING NUMBER:	SCALE:	SHEET:	REVISION:
FFS-3624	NTS	2 OF 4	REV B

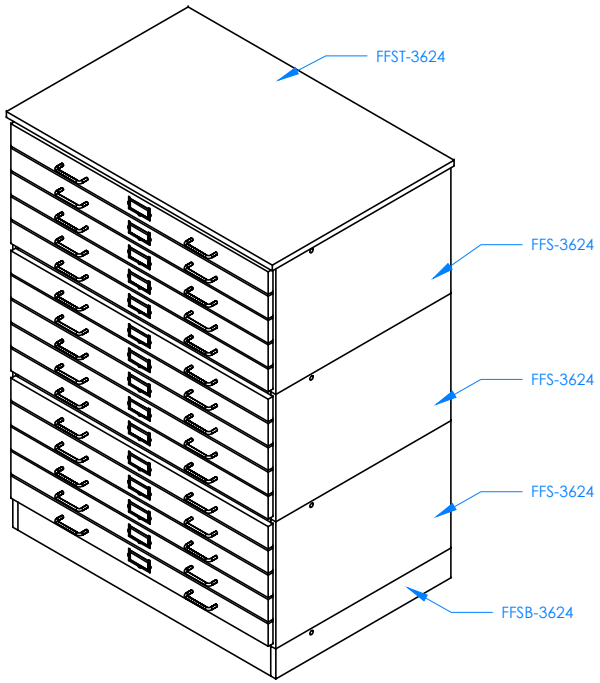

CABINET DESIGNATION

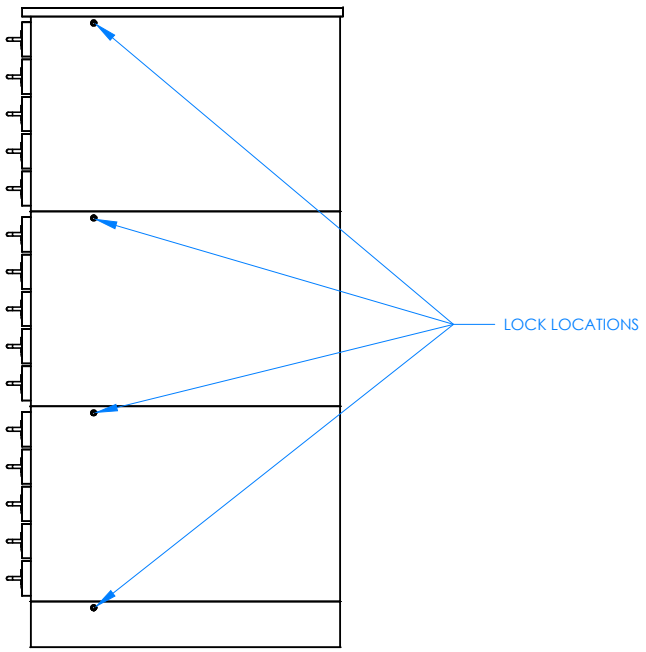

RIGHT SIDE SHOWN HERE

STEP 1:

STACK THE FFS-3624'S ON TOP OF THE FFSB-3624 WITH THE FFST-3624 AT THE TOP. MAKE SURE THEY ARE ALL ALIGNED EVENLY. WITH THE ALLEN KEY, TURN THE GIRO LOCK FOR EACH LOCK LOCATION ON THE RIGHT SIDE OF THE CABINET UNTIL IT LATCHES INTO PLACE. REPEAT PROCESS FOR THE LEFT SIDE.

NOTE:

1. BEFORE CABINET IS TO BE USED AND PUSHED AGAINST THE WALL, ALL LOCKS ON BOTH SIDES AND BACK MUST BE LATCHED. THE BACK LATCH IS THE MOST IMPORTANT TO PREVENT TIPPING.

REV.	DESCRIPTION	DATE	NAME	ECN NO.
B	ADDED UPDATED DRAWING AND INSTRUCTIONS	8/15/14	EMK	-
A	CREATED ASSEMBLY INSTRUCTIONS	1/2/14	EMK	-

REVISION LEVEL

DWN BY:	EMK	DWN DATE:	1/2/14
APR BY:		DATE APR:	
APR BY:		DATE APR:	

UNLESS OTHERWISE SPECIFIED DIMENSION ARE IN INCHES
CABINET SQUARENESS ± .0625
FRACTIONAL VALUES ± 1/32"
- ALL VALUES ± OVERALL -

THIS DRAWING IS THE SOLE PROPERTY OF DIVERSIFIED WOOD CRAFTS. IT MAY NOT BE ALTERED OR CHANGED WITHOUT PERMISSION

FLAT FILE STORAGE ASSEMBLY INSTRUCTIONS

DRAWING NUMBER:	SCALE:	SHEET:	REVISION:
FFS-3624	NTS	3 OF 4	REV B

IN HOUSE ASSEMBLY TEMPLATE

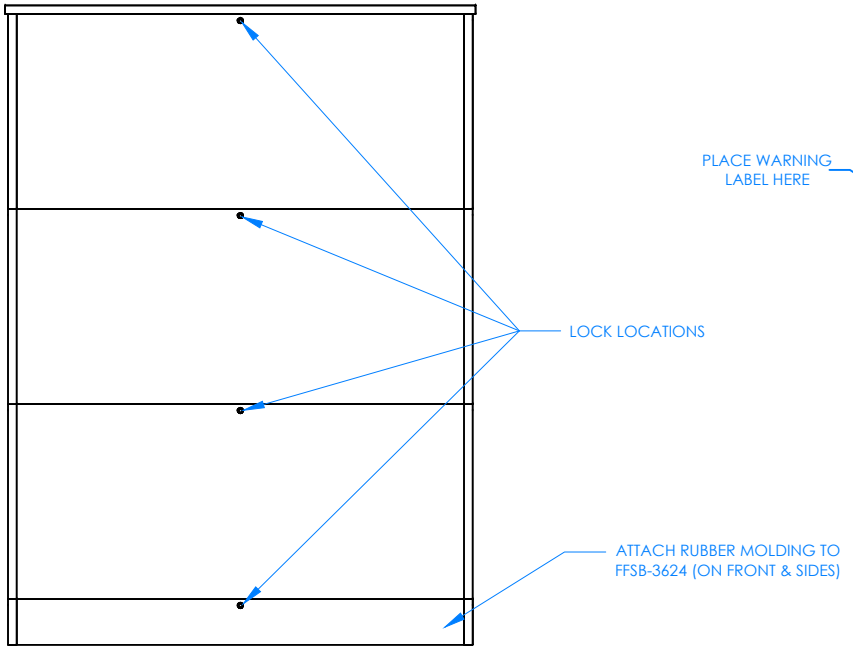

BACK SIDE SHOWN HERE

STEP 2:

ON THE BACK OF THE CABINET THERE WILL BE FOUR LOCK LOCATIONS THAT WILL ALSO NEED TO BE LATCHED. DO THE SAME AS YOU DID IN STEP 1 FOR THESE FOUR LOCATIONS. IT IS VERY IMPORTANT THESE LOCKS ARE LATCHED, OTHERWISE THE CABINET WILL BECOME VERY UNSTABLE. ATTACH RUBBER MOLDING USING CONTACT CEMENT. AFTER MOLDING IS IN PLACE, SCREW STAINLESS STEEL CORNER BRACKETS ON EACH CORNER OVER BASE MOLDING.

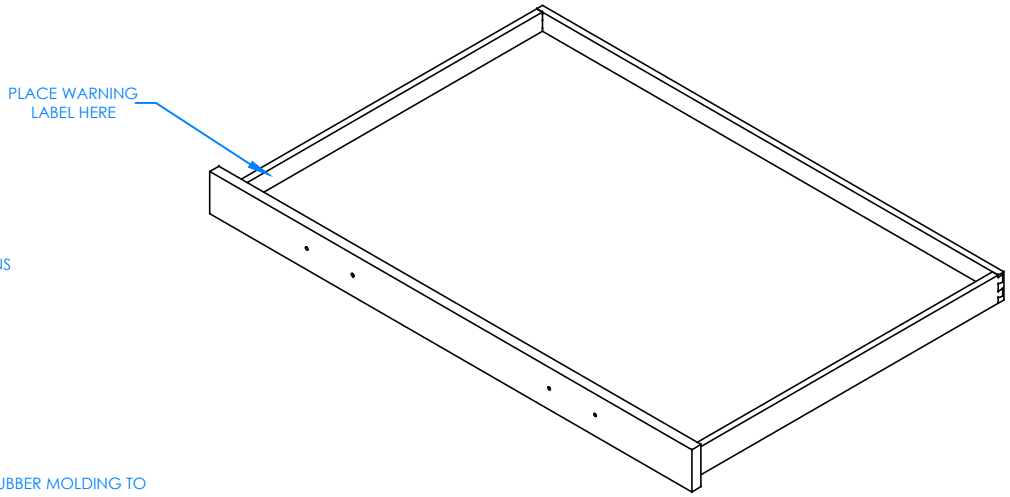

STEP 3:

APPLY THE WARNING LABEL ON THE INSIDE OF EACH DRAWER. EACH LABEL SHOULD BE PLACED ON THE LEFT SIDE OF THE DRAWER.

NOTE:

1. BEFORE CABINET IS TO BE USED AND PUSHED AGAINST THE WALL, ALL LOCKS ON BOTH SIDES AND BACK MUST BE LATCHED. THE BACK LATCH IS THE MOST IMPORTANT TO PREVENT TIPPING.

REV.	DESCRIPTION	DATE	NAME	ECN NO.
B	ADDED UPDATED DRAWING AND INSTRUCTIONS	8/15/14	EMK	-
A	CREATED ASSEMBLY INSTRUCTIONS	1/2/14	EMK	-

REVISION LEVEL

DWN BY:	EMK	DWN DATE:	1/2/14
APR BY:		DATE APR:	
APR BY:		DATE APR:	

UNLESS OTHERWISE SPECIFIED DIMENSION ARE IN INCHES
CABINET SQUARENESS ± .0625
FRACTIONAL VALUES ± 1/32"
- ALL VALUES ± OVERALL -

THIS DRAWING IS THE SOLE PROPERTY OF DIVERSIFIED WOOD CRAFTS. IT MAY NOT BE ALTERED OR CHANGED WITHOUT PERMISSION

ASSEMBLY INSTRUCTIONS

DRAWING NUMBER:	SCALE:	SHEET:	REVISION:
FFS-3624	NTS	4 OF 4	REV B