IN HOUSE ASSEMBLY TEMPLATE

FIRST AID BENCH

FAB-7230 (OAK OR MAPLE)
ASSEMBLY INSTRUCTIONS

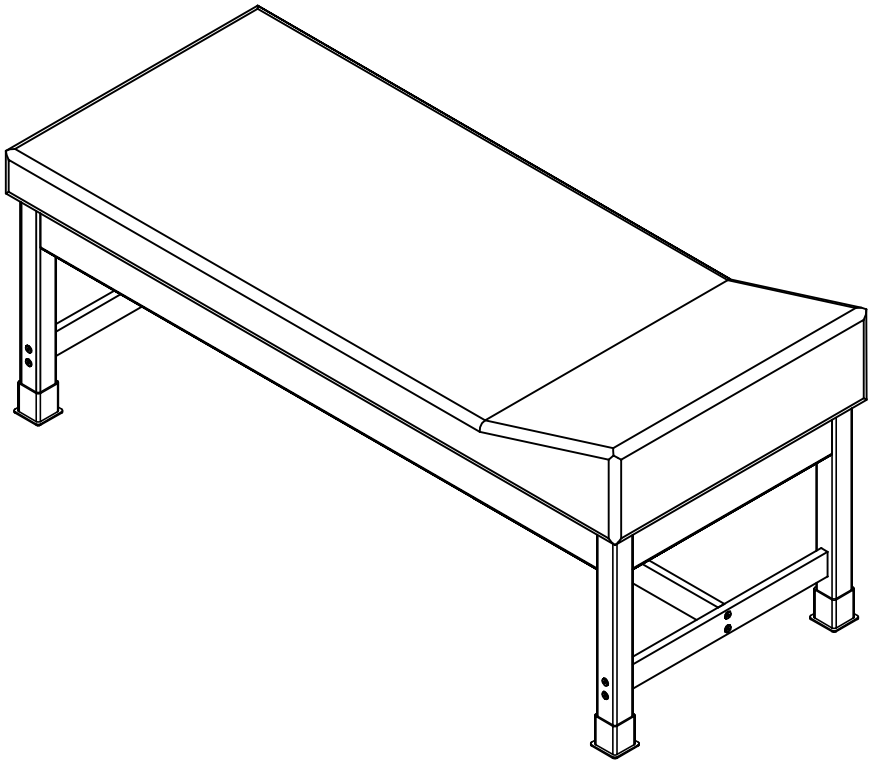

NOTE:

1. MODEL VIEWS MAY NOT REPRESENT EXACT MODEL PURCHASED

REV.	DESCRIPTION	DATE	NAME	ECN NO.
A	CREATED ASSEMBLY INSTRUCTIONS	8/20/14	EMK	-

REVISION LEVEL

ALL DIMENSIONS ARE IN INCHES UNLESS NOTED OTHERWISE	DWN BY:	EMK	DATE DWN: 8/20/14
CABINET SQUARENESS = ± .0625 FRACTIONAL VALUES = ± 1/32" - ALL VALUES ± OVERALL -	APR BY:		DATE APR:
	APR BY:		DATE APR:

CONFIDENTIAL:
ALL DESIGN RIGHTS RESERVED
THE INFORMATION, DATA, DESIGN, AND DRAWINGS EMBODIED IN THIS DOCUMENT AND ALL REPRODUCTIONS THEREOF ARE THE EXCLUSIVE PROPERTY OF DIVERSIFIED WOODCRAFTS, INC.

THESE DOCUMENTS ARE SUPPLIED WITH THE UNDERSTANDING THAT THEY WILL NOT BE DISCLOSED TO THIRD PARTIES WITHOUT WRITTEN CONSENT OF DIVERSIFIED WOODCRAFTS, INC. ANY REPRODUCTION IN PART OR WHOLE WITHOUT WRITTEN CONSENT IS SUBJECT TO LEGAL ACTION.

DIVERSIFIED WOODCRAFTS, INC
300 South Krueger Street
Suring, WI 54174
diversifiedwoodcrafts.com

TITLE:
FIRST AID BENCH
ASSEMBLY INSTRUCTIONS

DRAWING NUMBER:	SCALE:	SHEET:	REVISION:
FAB-7230	NTS	1 OF 9	REV A

TOOLS REQUIRED

½" WRENCH
½" SOCKET AND TORQUE WRENCH - OPTIONAL
4MM ALLEN WRENCH

ASSEMBLY COMPONENTS

ITEMS INCLUDED	PART #	PART DESCRIPTION	QTY
APRON AND TOP ASSEMBLY	N/A	APRON ASSEMBLY WITH SUPPORT TOP (FACTORY ASSEMBLY)	1
LEGS	VARIES	LEG, 2.25X2.25X21.25	4
CONFIRMATS - LEGS	227578	SCREW,7MMX90MM,CONN,ALLENHEAD, BLACK	8
CONFIRMATS - STRETCHER	228564	SCREW,7MMX50MM,CONN,ALLENHEAD, BLACK	4
BRACE	N/A	TABLE BRACE - 23.50" LONG	2
STRETCHER	N/A	TABLE STRETCHER - 67.00" LONG	1
LEG HARDWARE KIT	520001-4	LEG HARDWARE KIT, 4 LEGS	1
LEG BOOT	100076	LEG BOOT,BLK RUBBER	4
PAD	250538	9.50X30X72,BLACK,HIGH DENSITY FOAM	1
VELCRO	221594	VELCRO,BLACK,2.00W	2

NOTE:

1.

REV.	DESCRIPTION	DATE	NAME	ECN NO.
A	CREATED ASSEMBLY INSTRUCTIONS	8/20/14	EMK	-

REVISION LEVEL

ALL DIMENSIONS ARE IN INCHES UNLESS NOTED OTHERWISE

CABINET SQUARENESS = ± .0625
FRACTIONAL VALUES = ± 1/32"
- ALL VALUES ± OVERALL -

DWN BY:	EMK	DATE DWN:	8/20/14
APR BY:		DATE APR:	
APR BY:		DATE APR:	

CONFIDENTIAL:
ALL DESIGN RIGHTS RESERVED
THE INFORMATION, DATA, DESIGN, AND DRAWINGS EMBODIED IN THIS DOCUMENT AND ALL REPRODUCTIONS THEREOF ARE THE EXCLUSIVE PROPERTY OF DIVERSIFIED WOODCRAFTS, INC.

THESE DOCUMENTS ARE SUPPLIED WITH THE UNDERSTANDING THAT THEY WILL NOT BE DISCLOSED TO THIRD PARTIES WITHOUT WRITTEN CONSENT OF DIVERSIFIED WOODCRAFTS, INC. ANY REPRODUCTION IN PART OR WHOLE WITHOUT WRITTEN CONSENT IS SUBJECT TO LEGAL ACTION.

DIVERSIFIED WOODCRAFTS, INC
300 South Krueger Street
Suring, WI 54174
diversifiedwoodcrafts.com

TITLE:
FIRST AID BENCH
TOOLS AND ASSEMBLY INSTRUCTIONS

DRAWING NUMBER:	SCALE:	SHEET:	REVISION:
FAB-7230	NTS	2 OF 9	REV A

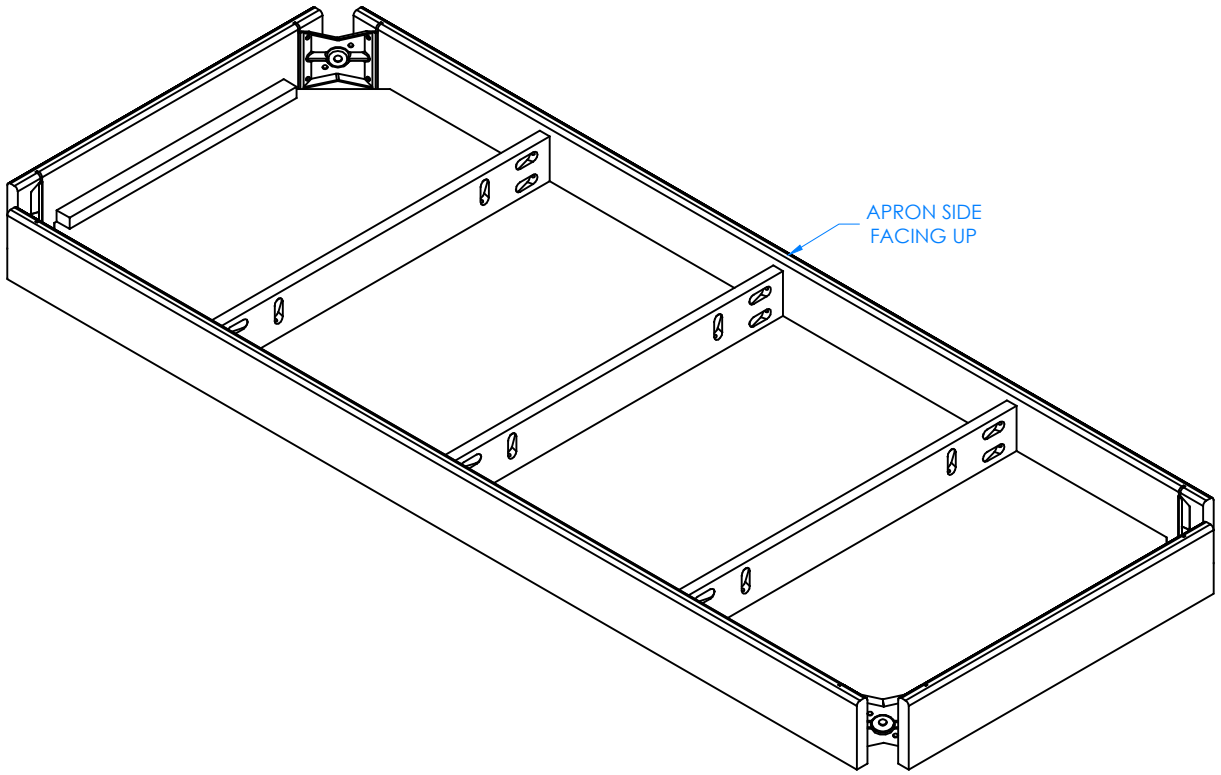

STEP 1:

- LAY TABLE ON FLOOR WITH APRON SIDE FACING UP.

NOTE:

1.

REV.	DESCRIPTION	DATE	NAME	ECN NO.
A	CREATED ASSEMBLY INSTRUCTIONS	8/20/14	EMK	-

REVISION LEVEL

ALL DIMENSIONS ARE IN INCHES UNLESS NOTED OTHERWISE

CABINET SQUARENESS = ± .0625
FRACTIONAL VALUES = ± 1/32"
- ALL VALUES ± OVERALL -

DWN BY:	EMK	DATE DWN:	8/20/14
APR BY:		DATE APR:	
APR BY:		DATE APR:	

CONFIDENTIAL:
ALL DESIGN RIGHTS RESERVED
THE INFORMATION, DATA, DESIGN, AND DRAWINGS EMBODIED IN THIS DOCUMENT AND ALL REPRODUCTIONS THEREOF ARE THE EXCLUSIVE PROPERTY OF DIVERSIFIED WOODCRAFTS, INC.

THESE DOCUMENTS ARE SUPPLIED WITH THE UNDERSTANDING THAT THEY WILL NOT BE DISCLOSED TO THIRD PARTIES WITHOUT WRITTEN CONSENT OF DIVERSIFIED WOODCRAFTS, INC. ANY REPRODUCTION IN PART OR WHOLE WITHOUT WRITTEN CONSENT IS SUBJECT TO LEGAL ACTION.

DIVERSIFIED WOODCRAFTS, INC
300 South Krueger Street
Suring, WI 54174
diversifiedwoodcrafts.com

TITLE:
FIRST AID BENCH
ASSEMBLY INSTRUCTIONS

DRAWING NUMBER:	SCALE:	SHEET:	REVISION:
FAB-7230	NTS	3 OF 9	REV A

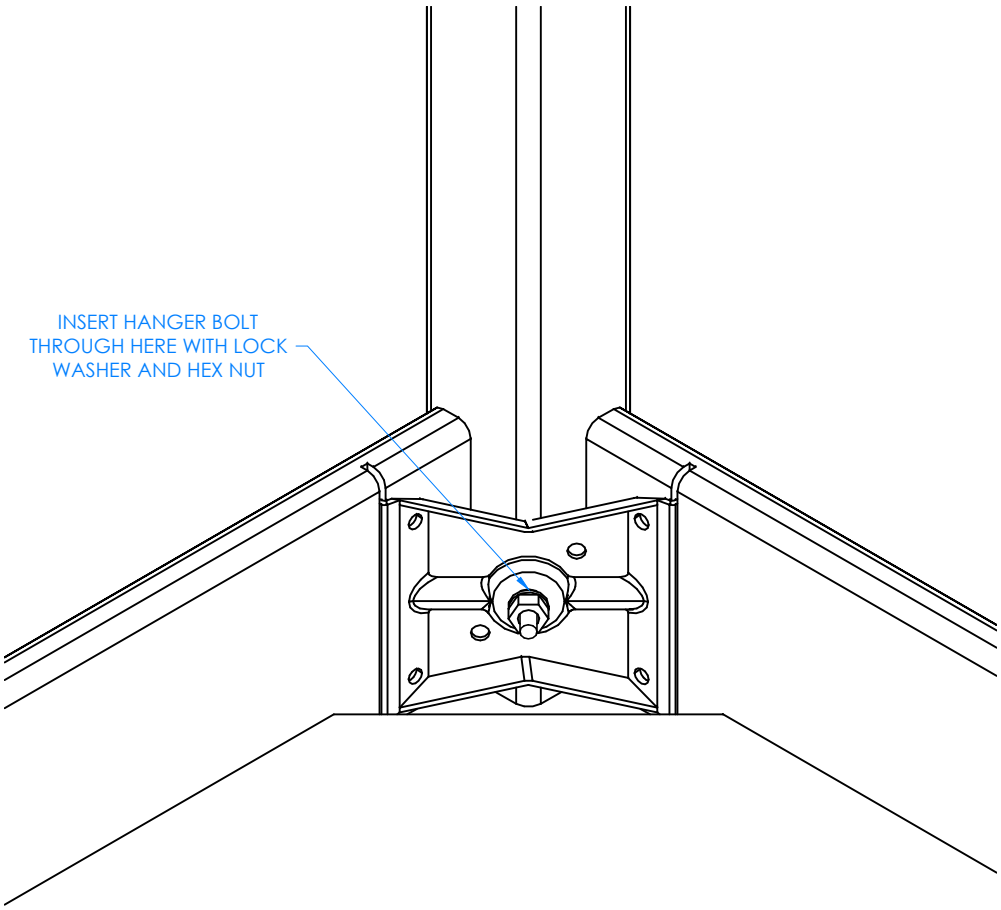

CLOSE UP OF CORNER LEG ASSEMBLY

STEP 2:

- INSERT HANGER BOLT ON ONE CORNER LEG THROUGH THE CORNER BRACKET AND INSERT LOCK WASHER AND HEX NUT.
- SCREW ON NUT USING A ½" WRENCH OR ½" SOCKET AND TORQUE WRENCH.
- DO NOT TIGHTEN ALL THE WAY.
- REPEAT FOR OTHER CORNER LEGS.

NOTE:

1.

REV.	DESCRIPTION	DATE	NAME	ECN NO.
A	CREATED ASSEMBLY INSTRUCTIONS	8/20/14	EMK	-

REVISION LEVEL

ALL DIMENSIONS ARE IN INCHES UNLESS NOTED OTHERWISE

CABINET SQUARENESS = ± .0625
FRACTIONAL VALUES = ± 1/32"
- ALL VALUES ± OVERALL -

DWN BY:	EMK	DATE DWN:	8/20/14
APR BY:		DATE APR:	
APR BY:		DATE APR:	

CONFIDENTIAL:
ALL DESIGN RIGHTS RESERVED
THE INFORMATION, DATA, DESIGN, AND DRAWINGS EMBODIED IN THIS DOCUMENT AND ALL REPRODUCTIONS THEREOF ARE THE EXCLUSIVE PROPERTY OF DIVERSIFIED WOODCRAFTS, INC.

THESE DOCUMENTS ARE SUPPLIED WITH THE UNDERSTANDING THAT THEY WILL NOT BE DISCLOSED TO THIRD PARTIES WITHOUT WRITTEN CONSENT OF DIVERSIFIED WOODCRAFTS, INC. ANY REPRODUCTION IN PART OR WHOLE WITHOUT WRITTEN CONSENT IS SUBJECT TO LEGAL ACTION.

DIVERSIFIED WOODCRAFTS, INC
300 South Krueger Street
Suring, WI 54174
diversifiedwoodcrafts.com

TITLE:
FIRST AID BENCH
ASSEMBLY INSTRUCTIONS

DRAWING NUMBER:	SCALE:	SHEET:	REVISION:
FAB-7230	NTS	4 OF 9	REV A

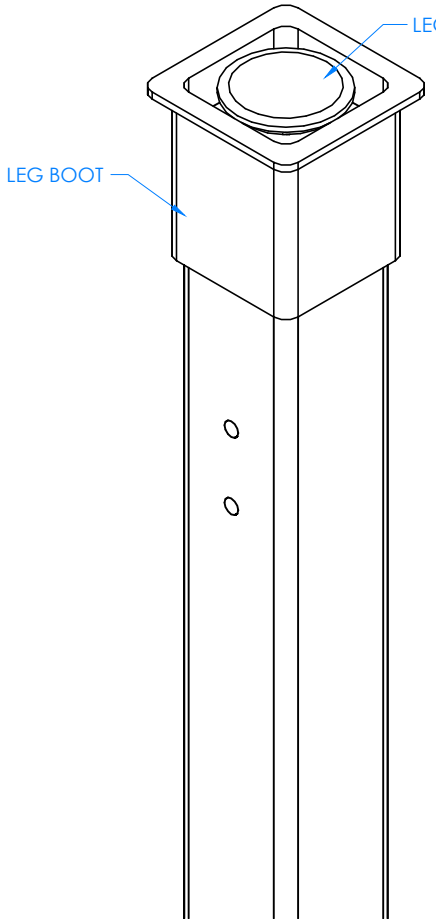

CLOSE UP OF LEG BOOT AND LEVELER ASSEMBLY

STEP 3:

- SLIDE LEG BOOTS ONTO LEGS WITH FLARED END TOWARD BOTTOM OF LEGS.
- SCREW LEG LEVELERS INTO T-NUT ON BOTTOM OF LEG.

NOTE:

1.

REV.	DESCRIPTION	DATE	NAME	ECN NO.
A	CREATED ASSEMBLY INSTRUCTIONS	8/20/14	EMK	-

REVISION LEVEL

ALL DIMENSIONS ARE IN INCHES UNLESS NOTED OTHERWISE

CABINET SQUARENESS = ± .0625
FRACTIONAL VALUES = ± 1/32"
- ALL VALUES ± OVERALL -

DWN BY:	EMK	DATE DWN:	8/20/14
APR BY:		DATE APR:	
APR BY:		DATE APR:	

CONFIDENTIAL:
ALL DESIGN RIGHTS RESERVED
THE INFORMATION, DATA, DESIGN, AND DRAWINGS EMBODIED IN THIS DOCUMENT AND ALL REPRODUCTIONS THEREOF ARE THE EXCLUSIVE PROPERTY OF DIVERSIFIED WOODCRAFTS, INC.

THESE DOCUMENTS ARE SUPPLIED WITH THE UNDERSTANDING THAT THEY WILL NOT BE DISCLOSED TO THIRD PARTIES WITHOUT WRITTEN CONSENT OF DIVERSIFIED WOODCRAFTS, INC. ANY REPRODUCTION IN PART OR WHOLE WITHOUT WRITTEN CONSENT IS SUBJECT TO LEGAL ACTION.

DIVERSIFIED WOODCRAFTS, INC
300 South Krueger Street
Suring, WI 54174
diversifiedwoodcrafts.com

TITLE:
FIRST AID BENCH
ASSEMBLY INSTRUCTIONS

DRAWING NUMBER:	SCALE:	SHEET:	REVISION:
FAB-7230	NTS	5 OF 9	REV A

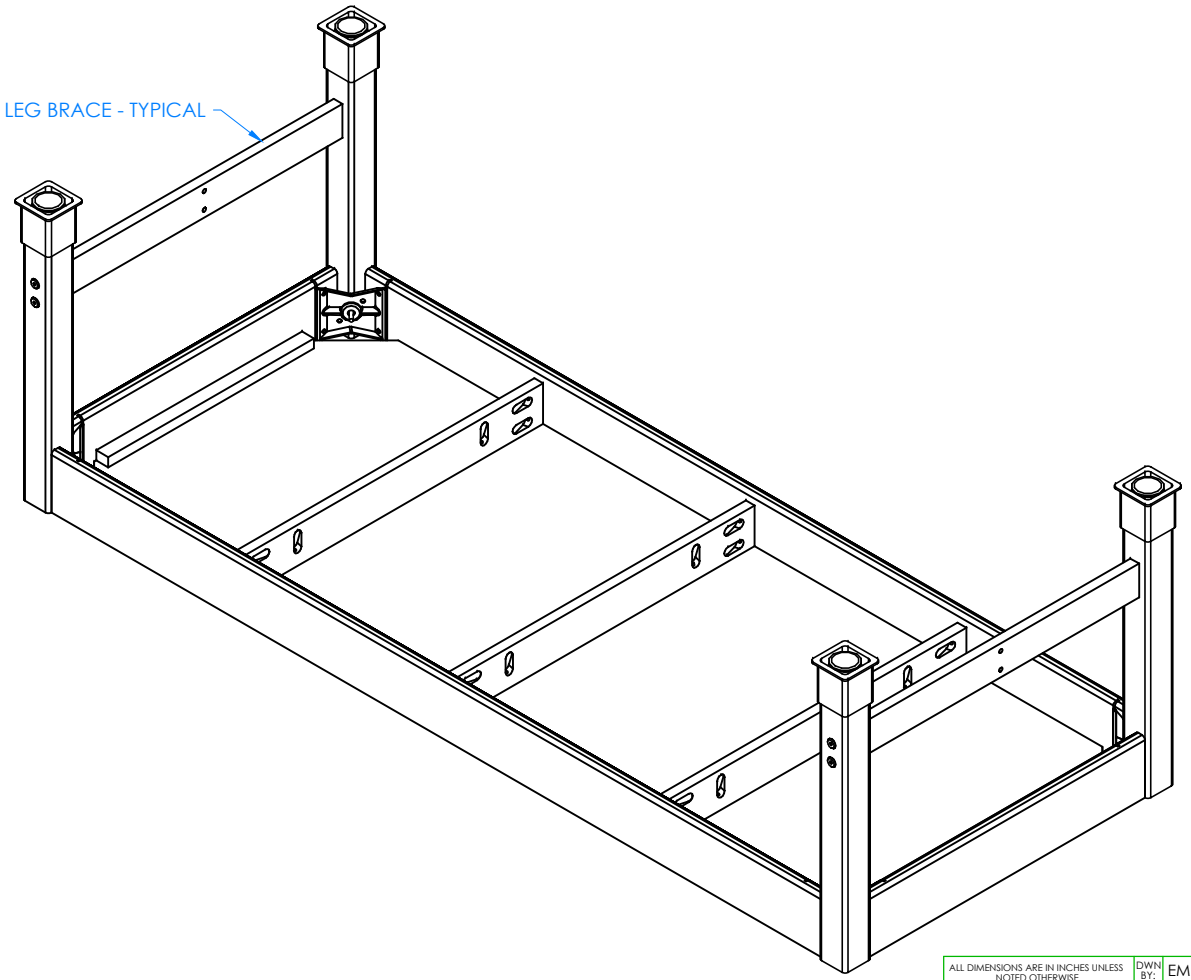

STEP 4:

- ATTACH BRACES TO LEGS.
- INSERT CONFIRMATS INTO ONE LEG AND SCREW INTO BRACE USING A 4MM ALLEN WRENCH.
- REPEAT ON ALL LEGS.
- MAKE SURE BRACES ARE STRAIGHT AND ALL CONFIRMATS ARE SECURE.

NOTE:

1.

REV.	DESCRIPTION	DATE	NAME	ECN NO.
A	CREATED ASSEMBLY INSTRUCTIONS	8/20/14	EMK	-

REVISION LEVEL

ALL DIMENSIONS ARE IN INCHES UNLESS NOTED OTHERWISE

CABINET SQUARENESS = ± .0625
FRACTIONAL VALUES = ± 1/32"
- ALL VALUES ± OVERALL -

DWN BY:	EMK	DATE DWN:	8/20/14
APR BY:		DATE APR:	
APR BY:		DATE APR:	

CONFIDENTIAL:
ALL DESIGN RIGHTS RESERVED
THE INFORMATION, DATA, DESIGN, AND DRAWINGS EMBODIED IN THIS DOCUMENT AND ALL REPRODUCTIONS THEREOF ARE THE EXCLUSIVE PROPERTY OF DIVERSIFIED WOODCRAFTS, INC.

THESE DOCUMENTS ARE SUPPLIED WITH THE UNDERSTANDING THAT THEY WILL NOT BE DISCLOSED TO THIRD PARTIES WITHOUT WRITTEN CONSENT OF DIVERSIFIED WOODCRAFTS, INC. ANY REPRODUCTION IN PART OR WHOLE WITHOUT WRITTEN CONSENT IS SUBJECT TO LEGAL ACTION.

DIVERSIFIED WOODCRAFTS, INC
300 South Krueger Street
Suring, WI 54174
diversifiedwoodcrafts.com

TITLE:
FIRST AID BENCH
ASSEMBLY INSTRUCTIONS

DRAWING NUMBER:	SCALE:	SHEET:	REVISION:
FAB-7230	NTS	6 OF 9	REV A

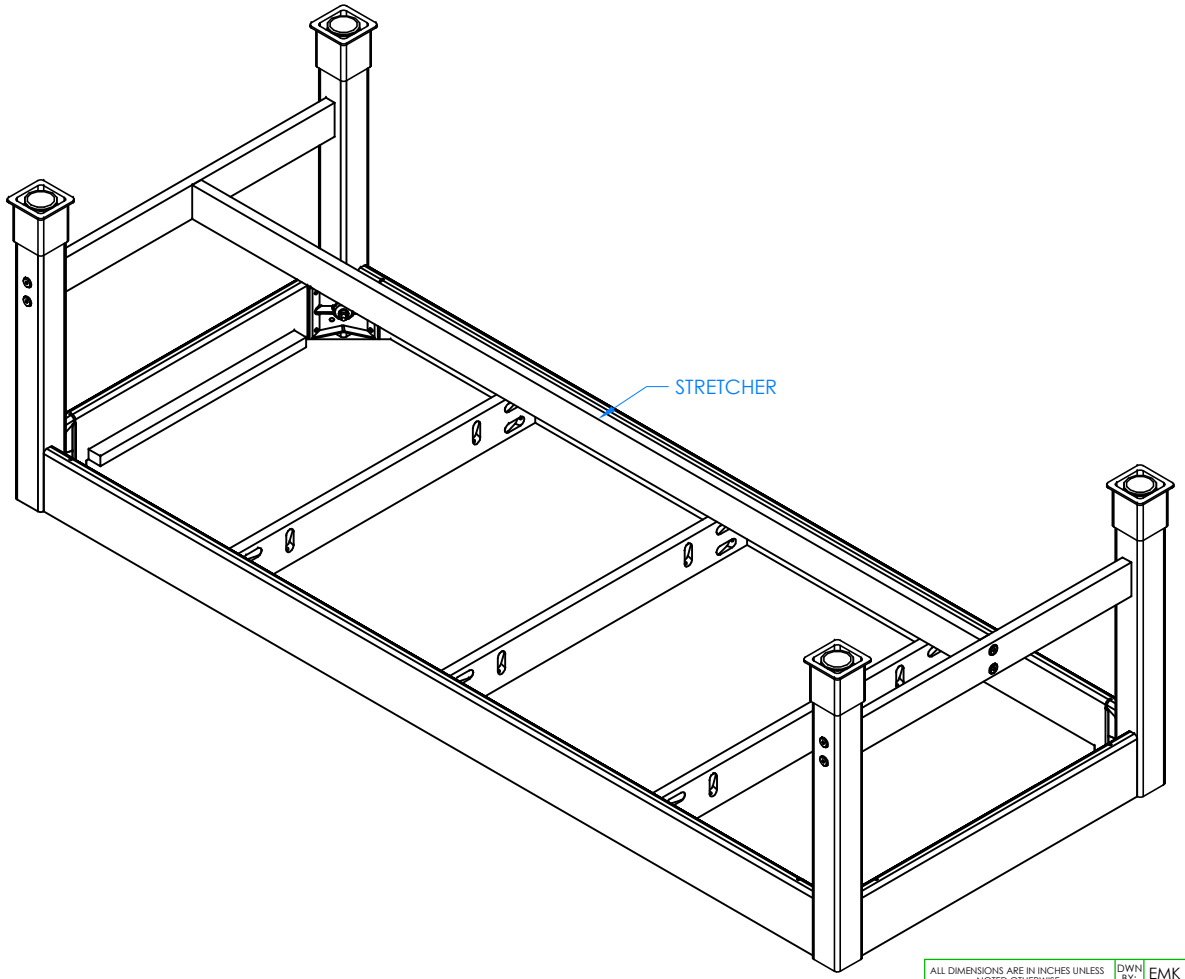

STEP 5:

- INSERT STRETCHER IN BETWEEN BRACES.
- ATTACH STRETCHER TO BRACES WITH HARDWARE PROVIDED.
- GO BACK TO STEP 2 AND TIGHTEN THE HANGER BOLTS FOR EACH LEG USING ½" WRENCH OR ½" SOCKET AND TORQUE WRENCH. TO A MINIMUM OF 12FT LBS BUT NOT TO EXCEED 17FT LBS.

NOTE:

1.

REV.	DESCRIPTION	DATE	NAME	ECN NO.
A	CREATED ASSEMBLY INSTRUCTIONS	8/20/14	EMK	-

REVISION LEVEL

ALL DIMENSIONS ARE IN INCHES UNLESS NOTED OTHERWISE

CABINET SQUARENESS = ± .0625
FRACTIONAL VALUES = ± 1/32"
- ALL VALUES ± OVERALL -

DWN BY:	EMK	DATE DWN:	8/20/14
APR BY:		DATE APR:	
APR BY:		DATE APR:	

CONFIDENTIAL:
ALL DESIGN RIGHTS RESERVED
THE INFORMATION, DATA, DESIGN, AND DRAWINGS EMBODIED IN THIS DOCUMENT AND ALL REPRODUCTIONS THEREOF ARE THE EXCLUSIVE PROPERTY OF DIVERSIFIED WOODCRAFTS, INC.

THESE DOCUMENTS ARE SUPPLIED WITH THE UNDERSTANDING THAT THEY WILL NOT BE DISCLOSED TO THIRD PARTIES WITHOUT WRITTEN CONSENT OF DIVERSIFIED WOODCRAFTS, INC. ANY REPRODUCTION IN PART OR WHOLE WITHOUT WRITTEN CONSENT IS SUBJECT TO LEGAL ACTION.

DIVERSIFIED WOODCRAFTS, INC
300 South Krueger Street
Suring, WI 54174
diversifiedwoodcrafts.com

TITLE:
FIRST AID BENCH
ASSEMBLY INSTRUCTIONS

DRAWING NUMBER:	SCALE:	SHEET:	REVISION:
FAB-7230	NTS	7 OF 9	REV A

IN HOUSE ASSEMBLY TEMPLATE

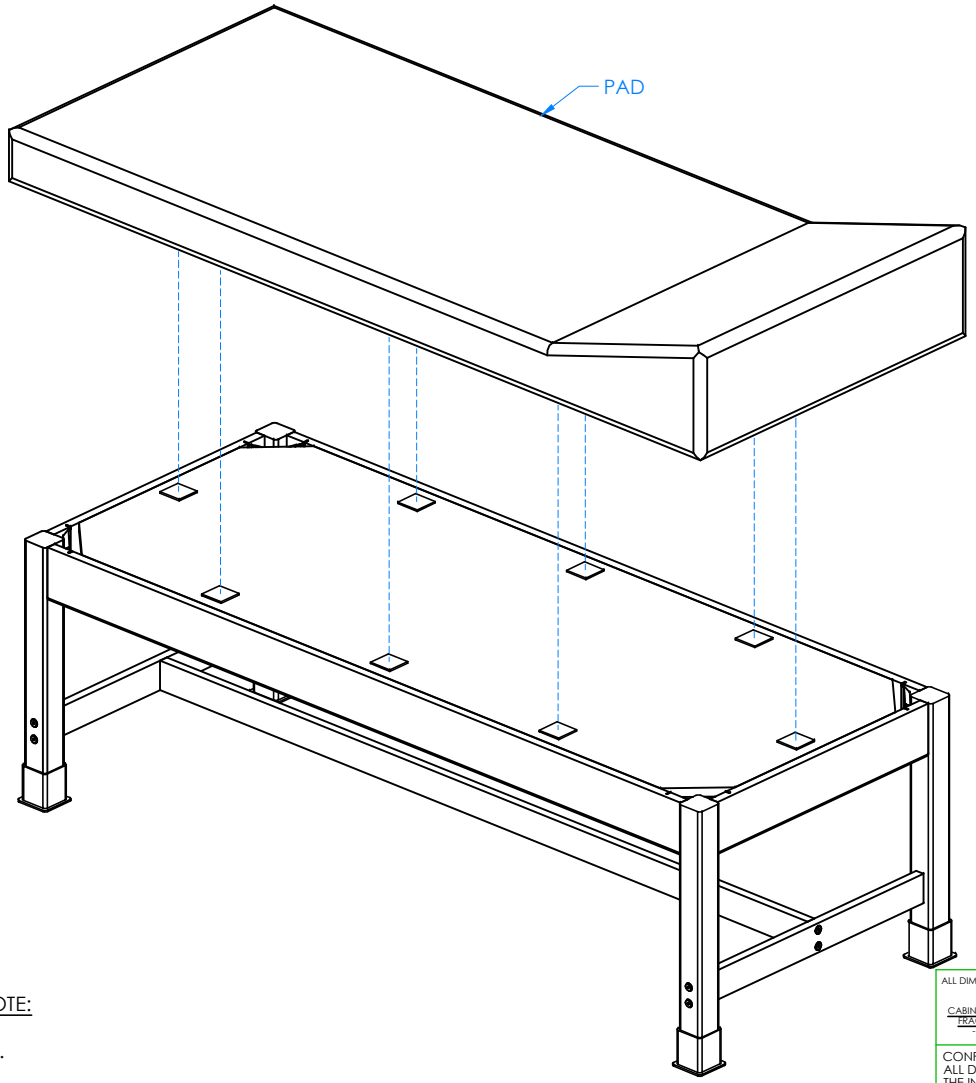

STEP 6:

- TURN TABLE OVER SO TOP IS UP.
- SET TABLE IN DESIRED LOCATION.
- PEEL PLASTIC OFF VELCRO.
- PLACE PAD ON TOP OF VELCRO STRIPS.

NOTE:

1.

REV.	DESCRIPTION	DATE	NAME	ECN NO.
A	CREATED ASSEMBLY INSTRUCTIONS	8/20/14	EMK	-

REVISION LEVEL

ALL DIMENSIONS ARE IN INCHES UNLESS NOTED OTHERWISE

CABINET SQUARENESS = ± .0625
FRACTIONAL VALUES = ± 1/32"
- ALL VALUES ± OVERALL -

DWN BY:	EMK	DATE DWN:	8/20/14
APR BY:		DATE APR:	
APR BY:		DATE APR:	

CONFIDENTIAL:
ALL DESIGN RIGHTS RESERVED
THE INFORMATION, DATA, DESIGN, AND DRAWINGS EMBODIED IN THIS DOCUMENT AND ALL REPRODUCTIONS THEREOF ARE THE EXCLUSIVE PROPERTY OF DIVERSIFIED WOODCRAFTS, INC.

THESE DOCUMENTS ARE SUPPLIED WITH THE UNDERSTANDING THAT THEY WILL NOT BE DISCLOSED TO THIRD PARTIES WITHOUT WRITTEN CONSENT OF DIVERSIFIED WOODCRAFTS, INC. ANY REPRODUCTION IN PART OR WHOLE WITHOUT WRITTEN CONSENT IS SUBJECT TO LEGAL ACTION.

DIVERSIFIED WOODCRAFTS, INC
300 South Krueger Street
Suring, WI 54174
diversifiedwoodcrafts.com

TITLE:
FIRST AID BENCH
ASSEMBLY INSTRUCTIONS

DRAWING NUMBER:	SCALE:	SHEET:	REVISION:
FAB-7230	NTS	8 OF 9	REV A

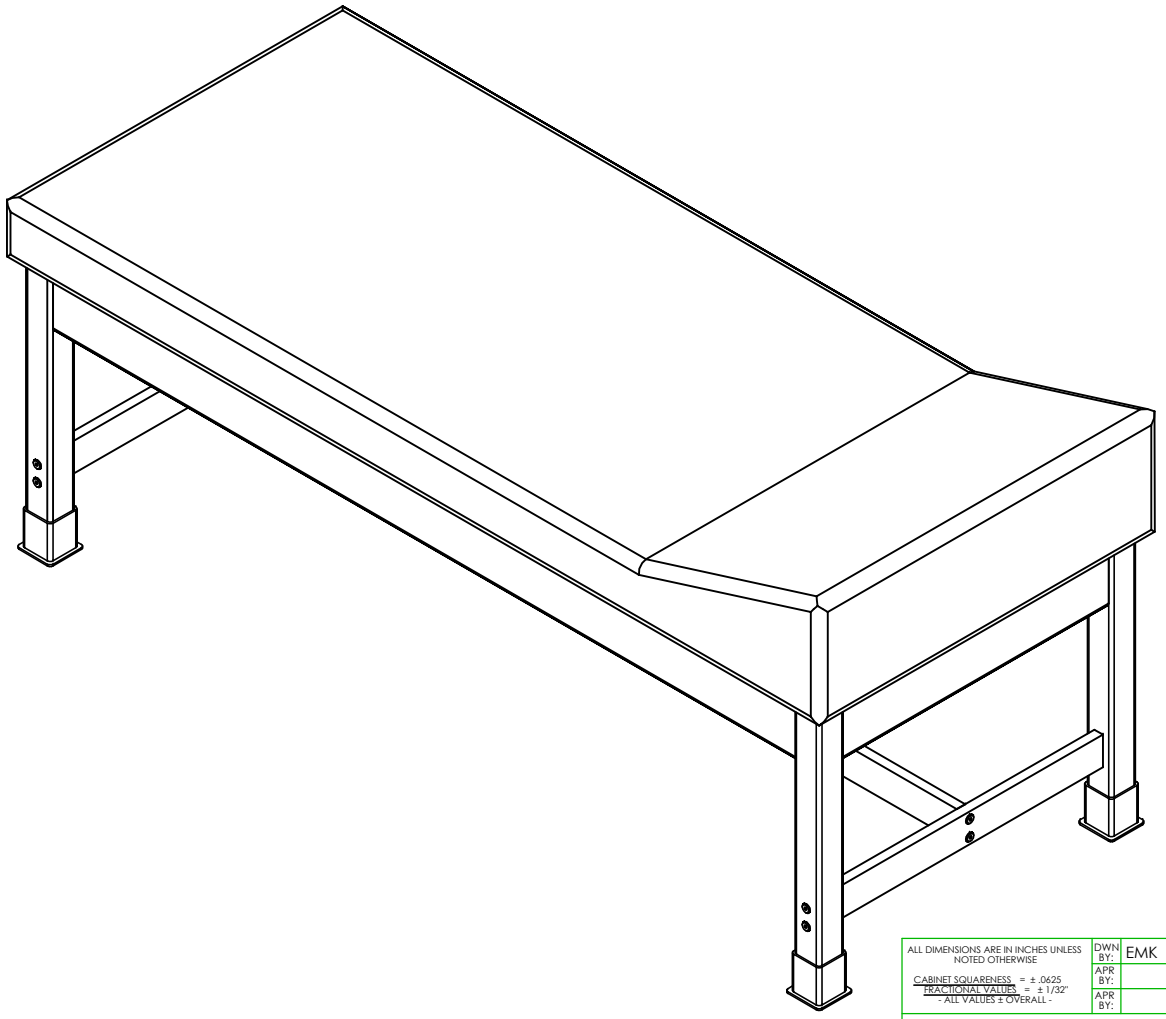

COMPLETE UNIT SHOWN

STEP 7:

- ADJUST LEG LEVELERS TO LEVEL TABLE.
- SLIDE LEG BOOTS DOWN TO FLOOR.

NOTE:

1.

REV.	DESCRIPTION	DATE	NAME	ECN NO.
A	CREATED ASSEMBLY INSTRUCTIONS	8/20/14	EMK	-

REVISION LEVEL

ALL DIMENSIONS ARE IN INCHES UNLESS NOTED OTHERWISE

CABINET SQUARENESS = ± .0625
FRACTIONAL VALUES = ± 1/32"
- ALL VALUES ± OVERALL -

DWN BY:	EMK	DATE DWN:	8/20/14
APR BY:		DATE APR:	
APR BY:		DATE APR:	

CONFIDENTIAL:
ALL DESIGN RIGHTS RESERVED
THE INFORMATION, DATA, DESIGN, AND DRAWINGS EMBODIED IN THIS DOCUMENT AND ALL REPRODUCTIONS THEREOF ARE THE EXCLUSIVE PROPERTY OF DIVERSIFIED WOODCRAFTS, INC.

THESE DOCUMENTS ARE SUPPLIED WITH THE UNDERSTANDING THAT THEY WILL NOT BE DISCLOSED TO THIRD PARTIES WITHOUT WRITTEN CONSENT OF DIVERSIFIED WOODCRAFTS, INC. ANY REPRODUCTION IN PART OR WHOLE WITHOUT WRITTEN CONSENT IS SUBJECT TO LEGAL ACTION.

DIVERSIFIED WOODCRAFTS, INC
300 South Krueger Street
Suring, WI 54174
diversifiedwoodcrafts.com

TITLE:
FIRST AID BENCH
ASSEMBLY INSTRUCTIONS

DRAWING NUMBER:	SCALE:	SHEET:	REVISION:
FAB-7230	NTS	9 OF 9	REV A