IN HOUSE ASSEMBLY TEMPLATE

DRAWER BASE DRAWING TABLE

DT-4A, DT-4SA, & DT-8A

ASSEMBLY INSTRUCTIONS

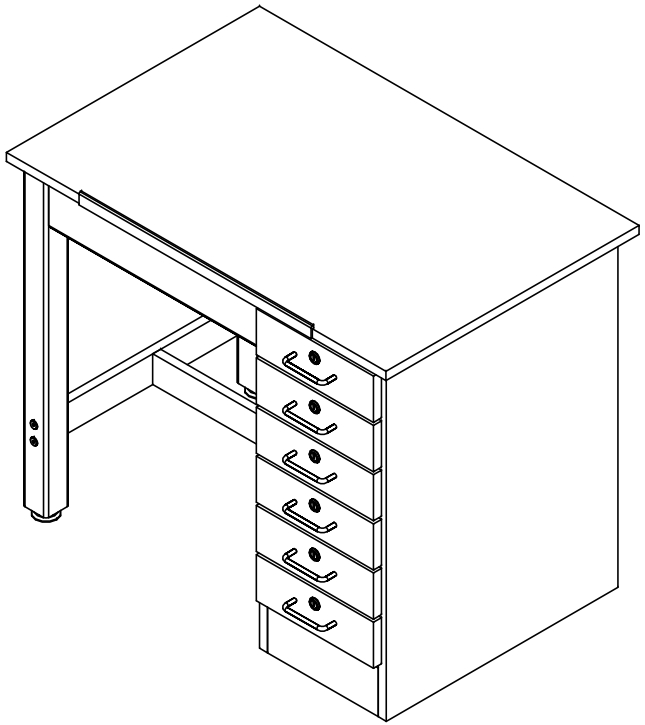

NOTE:

1. MODEL VIEWS MAY NOT REPRESENT EXACT MODEL PURCHASED

DWN BY:	EMK	DWN DATE:	12/29/14
APR BY:		DATE APR:	
APR BY:		DATE APR:	

UNLESS OTHERWISE SPECIFIED DIMENSION ARE IN INCHES

CABINET SQUARENESS ± .0625
FRACTIONAL VALUES ± 1/32"
- ALL VALUES ± OVERALL -

DRAWER BASE DRAWING TABLE
ASSEMBLY INSTRUCTIONS

REV.	DESCRIPTION	DATE	NAME	ECN NO.
A	CREATED ASSEMBLY INSTRUCTIONS	12/29/14	EMK	-

REVISION LEVEL

THIS DRAWING IS THE SOLE PROPERTY OF DIVERSIFIED WOOD CRAFTS. IT MAY NOT BE ALTERED OR CHANGED WITHOUT PERMISSION

DRAWING NUMBER:	SCALE:	SHEET:	REVISION:
DT-4A, DT-4SA, & DT-8A	NTS	1 OF 6	REV A

TOOLS REQUIRED
½" WRENCH
½" SOCKET AND TORQUE WRENCH - OPTIONAL
4MM ALLEN WRENCH

ASSEMBLY COMPONENTS

ITEMS INCLUDED	PART #	PART DESCRIPTION	QTY
TOP AND APRON ASSEMBLY	N/A	TOP ASSEMBLY (FACTORY ASSEMBLED)	1
CABINET	N/A	CABINET - SIZE VARIES	1
LEGS	VARIES	LEG,MPL - HEIGHT VARIES	2
LEG HARDWARE	520001	LEG HARDWARE KIT, 1 LEG	2
LEG BRACE	N/A	LEG BRACE - SIZE VARIES	1
STRETCHER	N/A	STRETCHER - 20.75" LONG	1
CONFIRMATS - LEGS	227578	SCREW,7MMX90MM,CONN,ALLENHEAD, BLACK	4
CONFIRMATS - STRETCHER	228564	SCREW,7MMX50MM,CONN,ALLENHEAD, BLACK	4
BOLT - INTERNAL APRON	231922	BOLT,⅜ -16 X 1.625 HEX HEAD	2
WASHER - INTERNAL APRON	100451	WASHER, 5⁄16 FLAT ZINC PLATED	2
PENCIL LEDGE	14-0027	PENCIL LEDGE	1
SCREWS - PENCIL LEDGE	236263	SCREW,#6X¾ TRUSS HEAD,QUAD BLACK	6

NOTE:

1.

REV.	DESCRIPTION	DATE	NAME	ECN NO.
A	CREATED ASSEMBLY INSTRUCTIONS	12/29/14	EMK	-

REVISION LEVEL

DWN BY:	EMK	DWN DATE:	12/29/14
APR BY:		DATE APR:	
APR BY:		DATE APR:	

UNLESS OTHERWISE SPECIFIED DIMENSION ARE IN INCHES
CABINET SQUARENESS ± .0625
FRACTIONAL VALUES ± 1/32"
- ALL VALUES ± OVERALL -

THIS DRAWING IS THE SOLE PROPERTY OF DIVERSIFIED WOOD CRAFTS. IT MAY NOT BE ALTERED OR CHANGED WITHOUT PERMISSION

DRAWER BASE DRAWING TABLE
TOOLS AND ASSEMBLY COMPONENTS

DRAWING NUMBER:	SCALE:	SHEET:	REVISION:
DT-4A, DT-4SA, & DT-8A	NTS	2 OF 6	REV A

IN HOUSE ASSEMBLY TEMPLATE

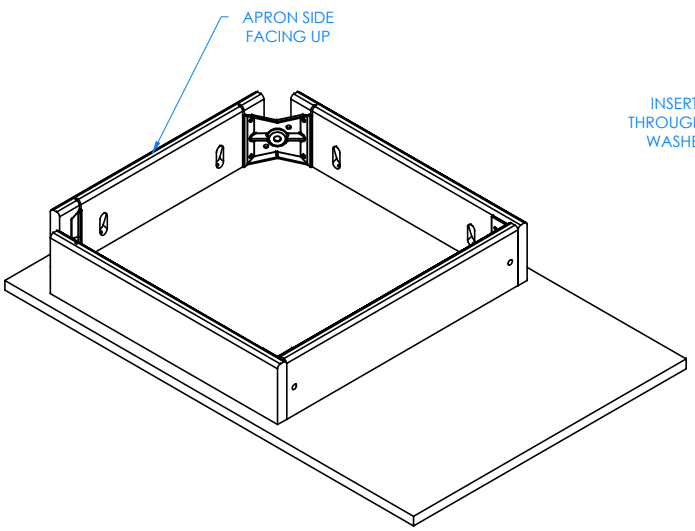

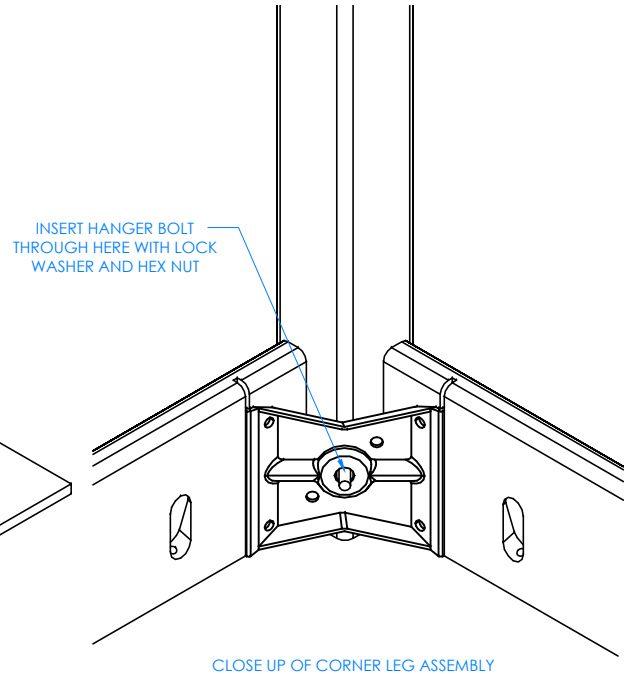

CLOSE UP OF CORNER LEG ASSEMBLY

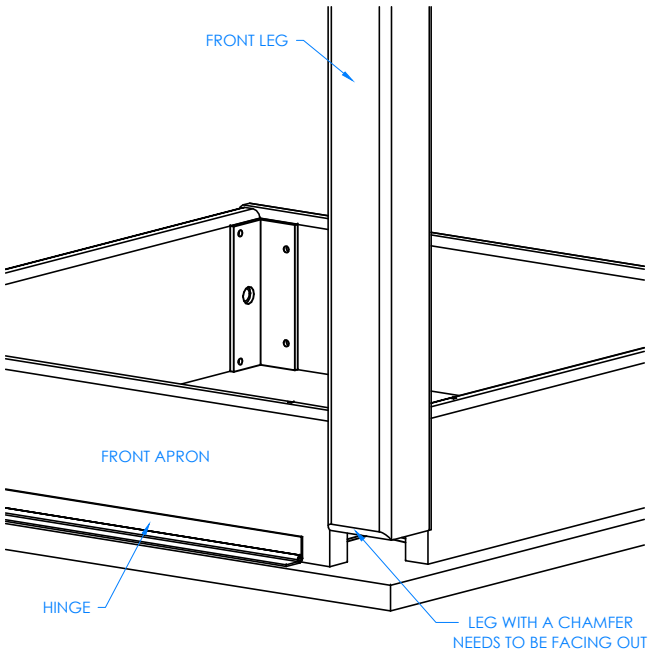

CLOSE UP OF LEG WITH A CHAMFER

STEP 1:

LAY APRON ASSEMBLY ON FLOOR WITH APRON SIDE FACING UP. BE SURE TOP ASSEMBLY IS ON A CLEAN SURFACE TO PREVENT DAMAGE .

STEP 2:

INSERT HANGER BOLT ON ONE OF THE LEGS THROUGH THE CORNER BRACKET AND INSERT THE LOCK WASHER AND HEX NUT. USING A ½" WRENCH OR ½" SOCKET AND TORQUE WRENCH, SCREW ON THE NUT BUT DO NOT TIGHTEN ALL THE WAY. REPEAT FOR THE OTHER LEG. NOTE: THE LEG WITH A CHAMFER MUST GO ON THE FRONT OF THE TABLE WITH CHAMFERED EDGE FACING OUT .

NOTE:

1.

DWN BY:	EMK	DWN DATE:	12/29/14
APR BY:		DATE APR:	
APR BY:		DATE APR:	

UNLESS OTHERWISE SPECIFIED DIMENSION ARE IN INCHES
CABINET SQUARENESS ± .0625
FRACTIONAL VALUES ± 1/32"
- ALL VALUES ± OVERALL -

DRAWER BASE DRAWING TABLE ASSEMBLY INSTRUCTIONS

REV.	DESCRIPTION	DATE	NAME	ECN NO.
A	CREATED ASSEMBLY INSTRUCTIONS	12/29/14	EMK	-

REVISION LEVEL

THIS DRAWING IS THE SOLE PROPERTY OF DIVERSIFIED WOOD CRAFTS. IT MAY NOT BE ALTERED OR CHANGED WITHOUT PERMISSION

DRAWING NUMBER:	SCALE:	SHEET:	REVISION:
DT-4A, DT-4SA, & DT-8A	NTS	3 OF 6	REV A

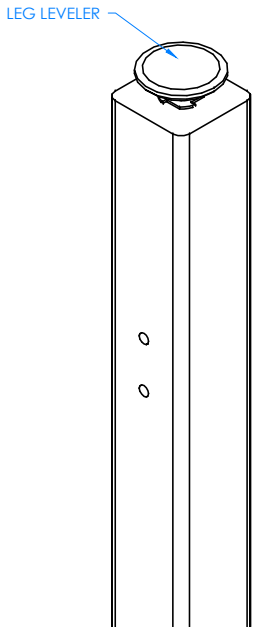

CLOSE UP OF LEG LEVELER ASSEMBLY

STEP 3:

SCREW LEG LEVELERS INTO T-NUT ON BOTTOM OF LEGS.

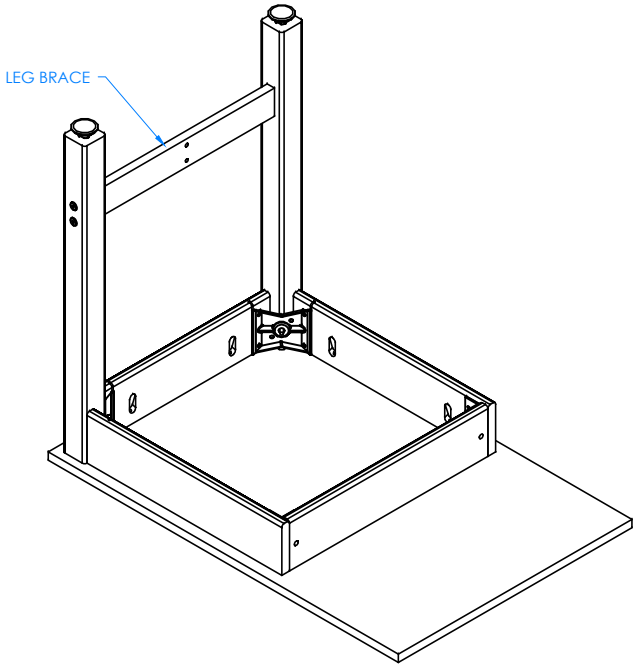

STEP 4:

USING A 4MM ALLEN WRENCH, INSERT CONFIRMATS INTO ONE LEG AND SCREW INTO BRACE. REPEAT FOR THE OTHER LEG. MAKE SURE BRACE IS STRAIGHT AND ALL CONFIRMATS ARE TIGHT.

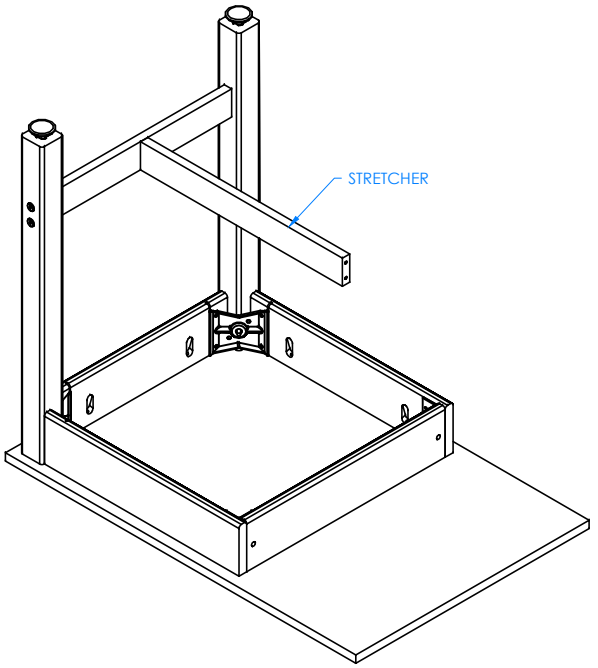

STEP 5:

ATTACH STRETCHER TO BRACE USING CONFIRMATS PROVIDED. GO BACK TO STEP 2 AND TIGHTEN UP THE HANGER BOLTS FOR EACH LEG USING A ½" WRENCH OR ½" SOCKET AND TORQUE WRENCH, TO A MINIMUM OF 12FT LBS BUT NOT TO EXCEED 17FT LBS .

NOTE:

1.

DWN BY:	EMK	DWN DATE:	12/29/14
APR BY:		DATE APR:	
APR BY:		DATE APR:	

UNLESS OTHERWISE SPECIFIED DIMENSION ARE IN INCHES

CABINET SQUARENESS ± .0625
FRACTIONAL VALUES ± 1/32"
- ALL VALUES ± OVERALL -

REV.	DESCRIPTION	DATE	NAME	ECN NO.
A	CREATED ASSEMBLY INSTRUCTIONS	12/29/14	EMK	-

REVISION LEVEL

THIS DRAWING IS THE SOLE PROPERTY OF DIVERSIFIED WOOD CRAFTS. IT MAY NOT BE ALTERED OR CHANGED WITHOUT PERMISSION

DRAWER BASE DRAWING TABLE ASSEMBLY INSTRUCTIONS

DRAWING NUMBER:	SCALE:	SHEET:	REVISION:
DT-4A, DT-4SA, & DT-8A	NTS	4 OF 6	REV A

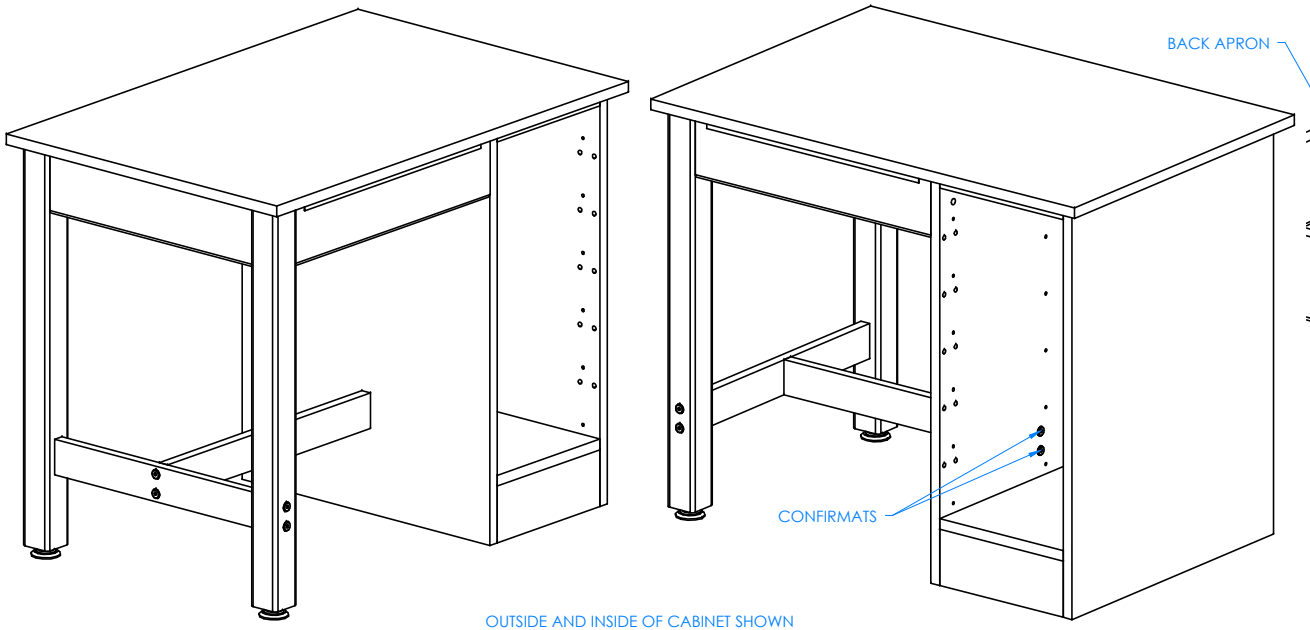

OUTSIDE AND INSIDE OF CABINET SHOWN
(DRAWERS REMOVED FOR CLARITY)

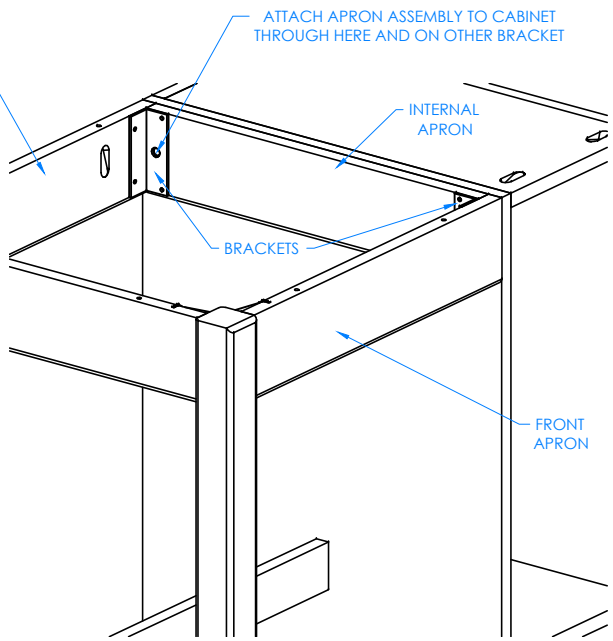

CLOSE UP OF APRON ASSEMBLY SHOWN
(TOP REMOVED FOR CLARITY)

STEP 6:

FLIP APRON ASSEMBLY OVER ONTO THE LEGS. ALIGN THE HOLES ON THE STRETCHER TO THE HOLES ON LEFT SIDE OF CABINET. TAKE OUT DRAWERS TO ATTACH THE STRETCHER FROM INSIDE THE CABINET. SCREW CONFIRMATS INTO STRETCHER.

STEP 7:

POSITION APRON ASSEMBLY SO INNER HOLES OF THE BRACKETS ON INTERNAL APRON ARE LINED UP WITH THE TWO HOLES ON LEFT SIDE OF CABINET (THE FRONT APRON WILL BE FLUSH WITH THE FRONT OF THE CABINET AND THE BACK APRON WILL BE FLUSH WITH THE BACK OF THE CABINET). INSERT THE TWO BOLTS AND WASHERS THAT ARE PROVIDED INTO THOSE HOLES AND TIGHTEN. ADJUST LEG LEVELERS TO LEVEL APRON ASSEMBLY WITH THE CABINET.

NOTE:

1.

REV.	DESCRIPTION	DATE	NAME	ECN NO.
A	CREATED ASSEMBLY INSTRUCTIONS	12/29/14	EMK	-
REVISION LEVEL				

DWN BY:	EMK	DWN DATE:	12/29/14
APR BY:		DATE APR:	
APR BY:		DATE APR:	

UNLESS OTHERWISE SPECIFIED DIMENSION ARE IN INCHES
CABINET SQUARENESS ± .0625
FRACTIONAL VALUES ± 1/32"
- ALL VALUES ± OVERALL -

THIS DRAWING IS THE SOLE PROPERTY OF DIVERSIFIED WOOD CRAFTS. IT MAY NOT BE ALTERED OR CHANGED WITHOUT PERMISSION

DRAWER BASE DRAWING TABLE ASSEMBLY INSTRUCTIONS

DRAWING NUMBER:	SCALE:	SHEET:	REVISION:
DT-4A, DT-4SA, & DT-8A	NTS	5 OF 6	REV A

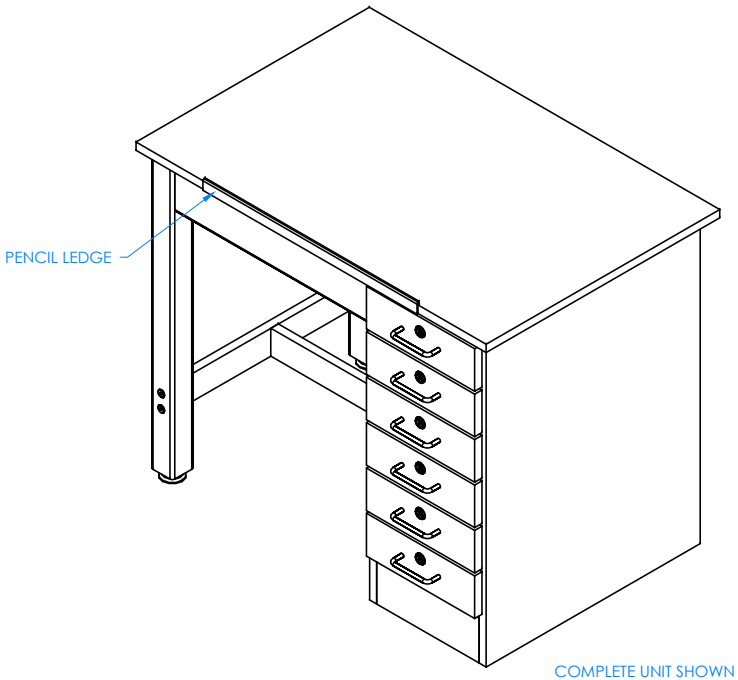

STEP 8:

LINE UP PENCIL LEDGE ON SIDE OF ADJUSTABLE TOP IN DESIRED LOCATION. SCREW PENCIL LEDGE TO TOP USING SCREWS PROVIDED. HOLES NEED TO BE PREDRILLED TO PREVENT TOP FROM SPLITTING . SET YOUR TABLE IN PLACE AND PUT DRAWERS BACK IN.

NOTE:

1.

A	CREATED ASSEMBLY INSTRUCTIONS	12/29/14	EMK	-
REV.	DESCRIPTION	DATE	NAME	ECN NO.
REVISION LEVEL				

DWN BY:	EMK	DWN DATE:	12/29/14
APR BY:		DATE APR:	
APR BY:		DATE APR:	

UNLESS OTHERWISE SPECIFIED DIMENSION ARE IN INCHES
CABINET SQUARENESS ± .0625
FRACTIONAL VALUES ± 1/32"
- ALL VALUES ± OVERALL -

THIS DRAWING IS THE SOLE PROPERTY OF DIVERSIFIED WOOD CRAFTS. IT MAY NOT BE ALTERED OR CHANGED WITHOUT PERMISSION

DRAWER BASE DRAWING TABLE ASSEMBLY INSTRUCTIONS

DRAWING NUMBER:	SCALE:	SHEET:	REVISION:
DT-4A, DT-4SA, & DT-8A	NTS	6 OF 6	REV A