IN HOUSE ASSEMBLY TEMPLATE

CLAY WEDGING TABLE

WT714 (OAK OR MAPLE)

ASSEMBLY INSTRUCTIONS

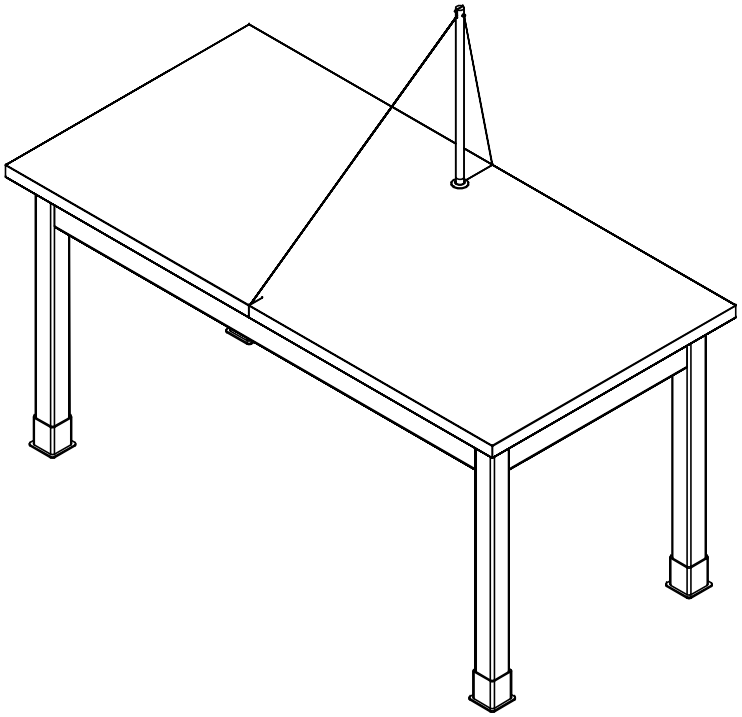

NOTE:

1. MODEL VIEWS MAY NOT REPRESENT EXACT MODEL PURCHASED

DWN BY:	EMK	DWN DATE:	3/4/14
APR BY:		DATE APR:	
APR BY:		DATE APR:	

UNLESS OTHERWISE SPECIFIED DIMENSION ARE IN INCHES

CABINET SQUARENESS ± .0625
FRACTIONAL VALUES ± 1/32"
- ALL VALUES ± OVERALL -

CLAY WEDGING TABLE
ASSEMBLY INSTRUCTIONS

REV.	DESCRIPTION	DATE	NAME	ECN NO.
A	CREATED ASSEMBLY INSTRUCTIONS	3/4/14	EMK	-

REVISION LEVEL

THIS DRAWING IS THE SOLE PROPERTY OF DIVERSIFIED WOOD CRAFTS. IT MAY NOT BE ALTERED OR CHANGED WITHOUT PERMISSION

DRAWING NUMBER:	SCALE:	SHEET:	REVISION:
WT714	NTS	1 OF 4	REV A

TOOLS REQUIRED

½" WRENCH
½" SOCKET AND TORQUE WRENCH - OPTIONAL

ASSEMBLY COMPONENTS

ITEMS INCLUDED	PART #	PART DESCRIPTION	QTY
TOP, APRON, ROD SOCKET ASSEMBLY	N/A	TOP ASSEMBLY (FACTORY ASSEMBLED)	1
LEGS (OAK)	500100	LEG,OAK, W/ HANGER BOLT AND T NUT	4
LEGS (MAPLE)	500110	LEG,MAPLE, W/ HANGER BOLT AND T NUT	4
LEG LEVELERS	100079	LEG LEVELERS,BLK BASE 1	4
LEG BOOT	100076	LEG BOOT,BLK RUBBER	4
EYE BOLT	248603	BOLT,1/4-20X1½", EYE BOLT	1
WASHER - EYE BOLT	100451	WASHER,5/16" FLAT ZINC PLATED	1
HEX NUT - EYE BOLT	100483	NUT,1/4-20 HEX ZINC	1
TURNBUCKLE	248601	TURNBUCKLE,HOOK&EYE,⅜"-16X7.5"L	1
ROD	248214	ROD,UPRIGHT,.75 DIAM X 22.00L	1
WIRE	247067	WIRE,.033 DIAM,304 STAINLESS	8
WIRE SLEEVE	247068	WIRE,SLEEV.033 DIAM,304 STAINLESS	4
CANVAS TOP	248215	CANVAS,TOP COVER,30X60,W/VELCRO	1

NOTE:

1.

REV.	DESCRIPTION	DATE	NAME	ECN NO.
A	CREATED ASSEMBLY INSTRUCTIONS	3/4/14	EMK	-
REVISION LEVEL				

DWN BY:	EMK	DWN DATE:	3/4/14
APR BY:		DATE APR:	
APR BY:		DATE APR:	

UNLESS OTHERWISE SPECIFIED DIMENSION ARE IN INCHES
CABINET SQUARENESS ± .0625
FRACTIONAL VALUES ± 1/32"
- ALL VALUES ± OVERALL -

THIS DRAWING IS THE SOLE PROPERTY OF DIVERSIFIED WOOD CRAFTS. IT MAY NOT BE ALTERED OR CHANGED WITHOUT PERMISSION

CLAY WEDGING TABLE
TOOLS AND ASSEMBLY COMPONENTS

DRAWING NUMBER:	SCALE:	SHEET:	REVISION:
WT714	NTS	2 OF 4	REV A

IN HOUSE ASSEMBLY TEMPLATE

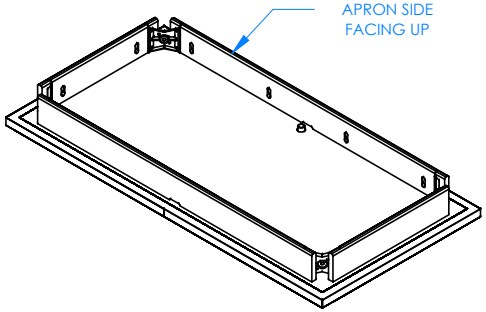

STEP 1:

LAY TOP ASSEMBLY ON FLOOR WITH APRON SIDE FACING UP. BE SURE TOP ASSEMBLY IS ON A CLEAN SURFACE TO PREVENT DAMAGE.

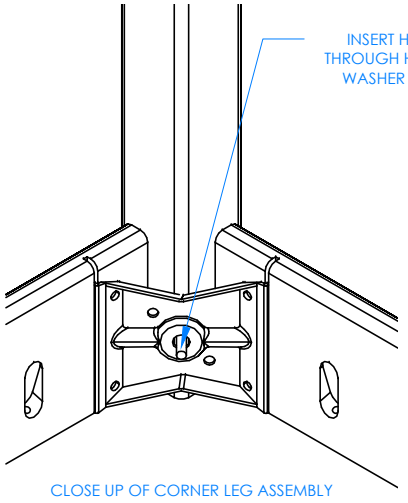

CLOSE UP OF CORNER LEG ASSEMBLY

STEP 2:

TAKE ONE OF THE LEGS, PLACE IT INTO THE CORNER OF APRON ASSEMBLY. INSERT HANGER BOLT THROUGH THE CORNER BRACKET AND PUT ON WASHER AND THE NUT. USING A ½" WRENCH OR ½" SOCKET AND TORQUE WRENCH, SCREW ON NUT USING A MINIMUM OF 12FT LBS BUT NOT TO EXCEED 17FT LBS. REPEAT FOR THE OTHER 3 LEGS.

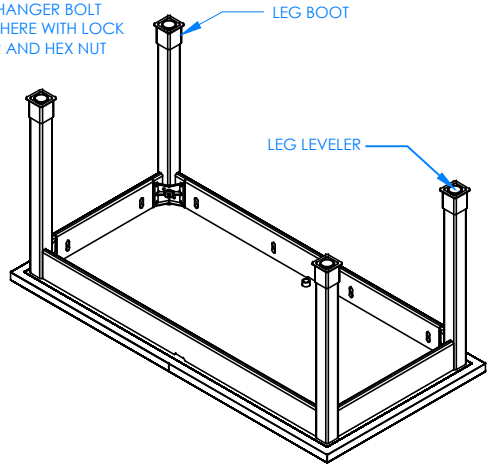

STEP 3:

WITH ALL THE LEGS IN PLACE AND WITH THE TABLE STILL UPSIDE DOWN, SLIDE LEG BOOTS ONTO THE LEGS WITH FLARED END TOWARD BOTTOM OF LEG. SCREW LEG LEVELERS INTO T-NUT IN THE BOTTOM OF LEG.

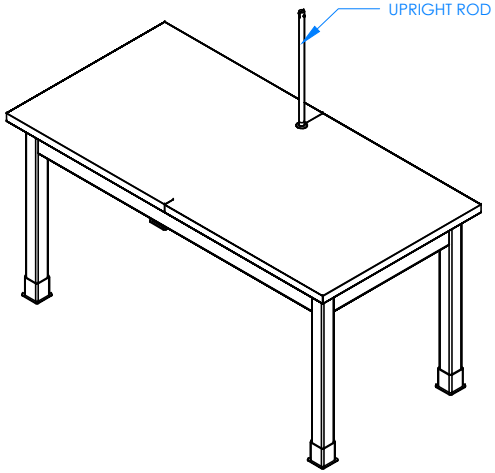

STEP 4:

TURN TABLE OVER SO TOP IS UP. ADJUST LEG LEVELERS TO LEVEL TABLE. SLIDE LEG BOOTS DOWN TO THE FLOOR. INSERT UPRIGHT ROD THROUGH THE ROD SOCKET IN THE TABLE TOP.

NOTE:

1.

A	CREATED ASSEMBLY INSTRUCTIONS	3/4/14	EMK	-
REV.	DESCRIPTION	DATE	NAME	ECN NO.
REVISION LEVEL				

DWN BY:	EMK	DWN DATE:	3/4/14
APR BY:		DATE APR:	
APR BY:		DATE APR:	

UNLESS OTHERWISE SPECIFIED DIMENSION ARE IN INCHES
CABINET SQUARENESS ± .0625
FRACTIONAL VALUES ± 1/32"
- ALL VALUES ± OVERALL -

THIS DRAWING IS THE SOLE PROPERTY OF DIVERSIFIED WOOD CRAFTS. IT MAY NOT BE ALTERED OR CHANGED WITHOUT PERMISSION

ASSEMBLY INSTRUCTIONS

DRAWING NUMBER:	SCALE:	SHEET:	REVISION:
WT714	NTS	3 OF 4	REV A

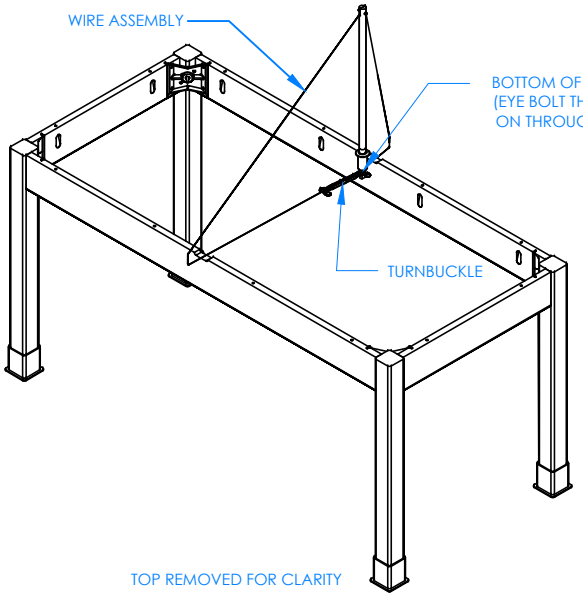

TOP REMOVED FOR CLARITY

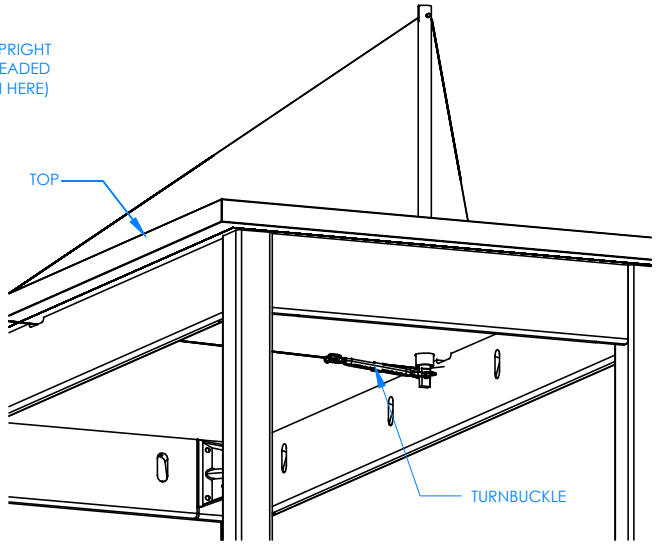

UNDERSIDE OF TABLE SHOWN HERE TO SHOWN TURNBUCKLE ASSEMBLY

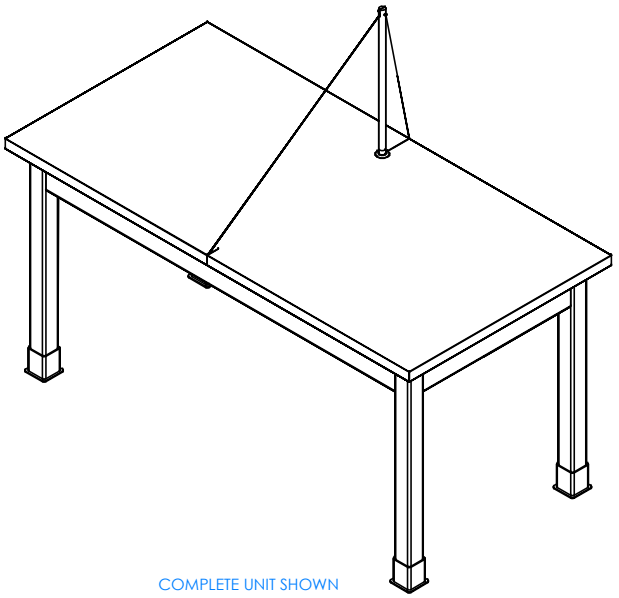

COMPLETE UNIT SHOWN

STEP 5:

FROM THE BOTTOM SIDE OF TABLE, INSERT EYE BOLT (WITH HEX NUT THREADED ALL THE WAY ON), THROUGH FLAT WASHER, AND THREAD IT INTO THE BOTTOM OF THE UPRIGHT AND TIGHTEN. WITH TURNBUCKLE AND WIRE ASSEMBLY STRETCHED OUT, FEED THE END OF THE WIRE THAT IS FARTHEST AWAY FROM THE TURNBUCKLE UP THROUGH THE SLOT IN FRONT APRON (APRON THAT IS FARTHEST AWAY FROM THE ROD SOCKET). HOOK TURNBUCKLE ONTO THE EYE BOLT FOR THE TIME BEING AND PULL WIRE ALL THE WAY THROUGH THE FRONT NOTCH.

STEP 6:

WRAP WIRE UP AND OVER THE TABLE, MAKING SURE THE WIRE FALLS INTO THE SLOT ON TOP OF THE ROD. CONTINUE TO WRAP THE WIRE DOWN THE BACK SIDE OF TABLE AND FEED THE LOOP END THROUGH THE SLOT OF BACK APRON. UNHOOK THE TURNBUCKLE FROM EYE BOLT. SLIP THE LOOP END OF THE WIRE OVER THE ROD SOCKET, RE-HOOK TURNBUCKLE TO THE EYE BOLT. START TURNING THE CENTER OF THE TURNBUCKLE TO START TENSIONING THE WIRE. WHEN FINISHED, TURNBUCKLE SHOULD BE VERTICAL WITH TABLE (SEE IMAGE AT BOTTOM).

STEP 7:

APPLY CANVAS TOP COVER TO TOP. SET TABLE IN PLACE.
NOTE: WASH CANVAS IN COLD WATER AND AIR DRY ONLY .



TURNBUCKLE ASSEMBLY

DWN BY:	EMK	DWN DATE:	3/4/14
APR BY:		DATE APR:	
APR BY:		DATE APR:	

UNLESS OTHERWISE SPECIFIED DIMENSION ARE IN INCHES
CABINET SQUARENESS ± .0625
FRACTIONAL VALUES ± 1/32"
- ALL VALUES ± OVERALL -

CLAY WEDGING TABLE ASSEMBLY INSTRUCTIONS

REV.	DESCRIPTION	DATE	NAME	ECN NO.
A	CREATED ASSEMBLY INSTRUCTIONS	3/4/14	EMK	-

REVISION LEVEL

THIS DRAWING IS THE SOLE PROPERTY OF DIVERSIFIED WOOD CRAFTS. IT MAY NOT BE ALTERED OR CHANGED WITHOUT PERMISSION

DRAWING NUMBER:	SCALE:	SHEET:	REVISION:
WT714	NTS	4 OF 4	REV A