CERAMIC WORK CENTER

CWC-72P

ASSEMBLY INSTRUCTIONS

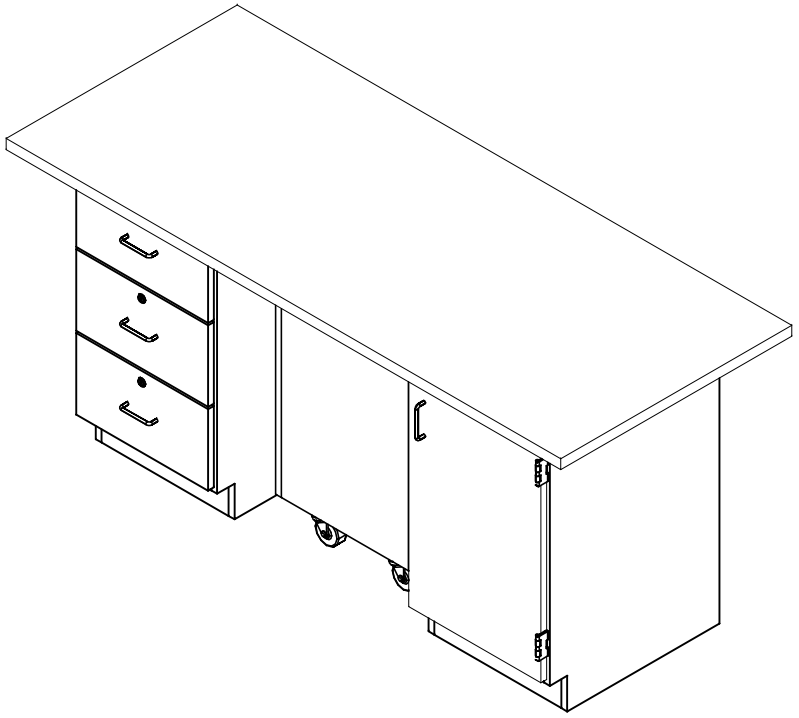

NOTE:

1. MODEL VIEWS MAY NOT REPRESENT EXACT MODEL PURCHASED

DWN BY:	EMK	DWN DATE:	2/18/14
APR BY:		DATE APR:	
APR BY:		DATE APR:	

UNLESS OTHERWISE SPECIFIED DIMENSION ARE IN INCHES

CABINET SQUARENESS ± .0625
FRACTIONAL VALUES ± 1/32"
- ALL VALUES ± OVERALL -

CERAMIC WORK CENTER
ASSEMBLY INSTRUCTIONS

REV.	DESCRIPTION	DATE	NAME	ECN NO.
A	CREATED ASSEMBLY INSTRUCTIONS	2/18/14	EMK	-

REVISION LEVEL

THIS DRAWING IS THE SOLE PROPERTY OF DIVERSIFIED WOOD CRAFTS. IT MAY NOT BE ALTERED OR CHANGED WITHOUT PERMISSION

DRAWING NUMBER:	SCALE:	SHEET:	REVISION:
CWC-72P	NTS	1 OF 3	REV A

TOOLS REQUIRED
SCREW DRIVER
CONTACT CEMENT
C-CLAMPS
SHIM STOCK (IF NEEDED)

ASSEMBLY COMPONENTS

ITEMS INCLUDED	PART #	PART DESCRIPTION	QTY
TOP	17-0036	TOP,PLAM,1.25X30X72,ALMOND	1
CABINET ASSEMBLY	N/A	B33 - 18"W X 22"D X 32.50"H	1
CABINET ASSEMBLY	N/A	B95 - 18"W X 22"D X 32.50"H	1
CABINET ASSEMBLY	N/A	C-38 - CLAY CART	1
SILICONE	100711	SILICONE,SEALANT,CLEAR	1
STAINLESS STEEL CORNERS	100057	CORNERS-STAINLESS STEEL,BASE	8
SCREWS - CORNERS	100064	SCREW,#6X½ PTH SMS SS SCREW	32
RUBBER MOLDING	100283	RUBBER BASE MOLDING(SOLD BY FOOT)	13.5
SHELF CLIPS	100027	SHELF CLIPS,PLASTIC,5MM PIN	4

NOTE:

1.

REV.	DESCRIPTION	DATE	NAME	ECN NO.
A	CREATED ASSEMBLY INSTRUCTIONS	2/18/14	EMK	-

REVISION LEVEL

DWN BY:	EMK	DWN DATE:	2/18/14
APR BY:		DATE APR:	
APR BY:		DATE APR:	

UNLESS OTHERWISE SPECIFIED DIMENSION ARE IN INCHES
CABINET SQUARENESS ± .0625
FRACTIONAL VALUES ± 1/32"
- ALL VALUES ± OVERALL -

THIS DRAWING IS THE SOLE PROPERTY OF DIVERSIFIED WOOD CRAFTS. IT MAY NOT BE ALTERED OR CHANGED WITHOUT PERMISSION

CERAMIC WORK CENTER
TOOLS AND ASSEMBLY COMPONENTS

DRAWING NUMBER:	SCALE:	SHEET:	REVISION:
CWC-72P	NTS	2 OF 3	REV A

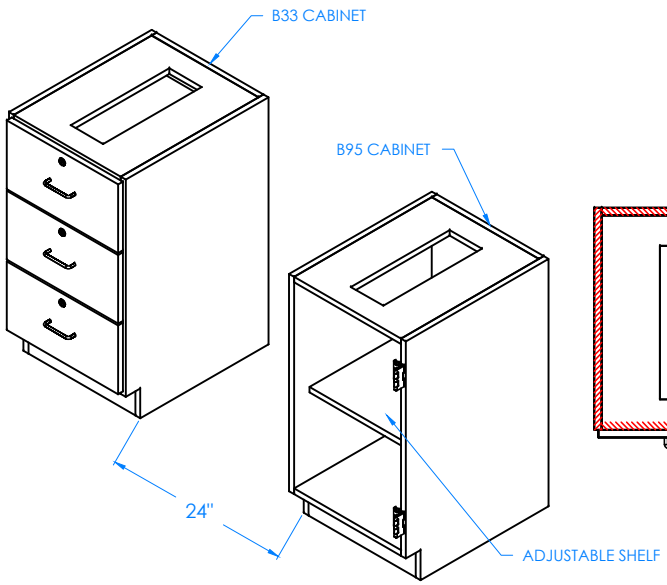

DOOR REMOVED TO SHOW CLARITY

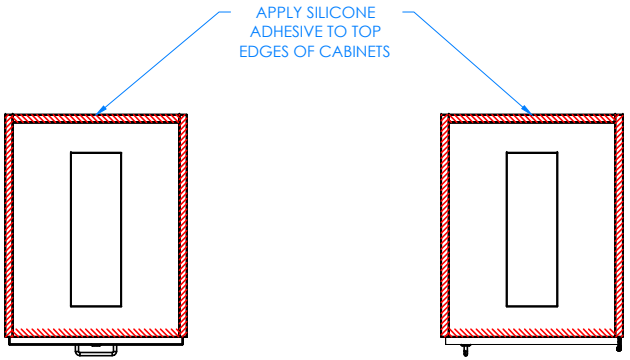

TOP VIEW OF WORK CENTER SHOWN

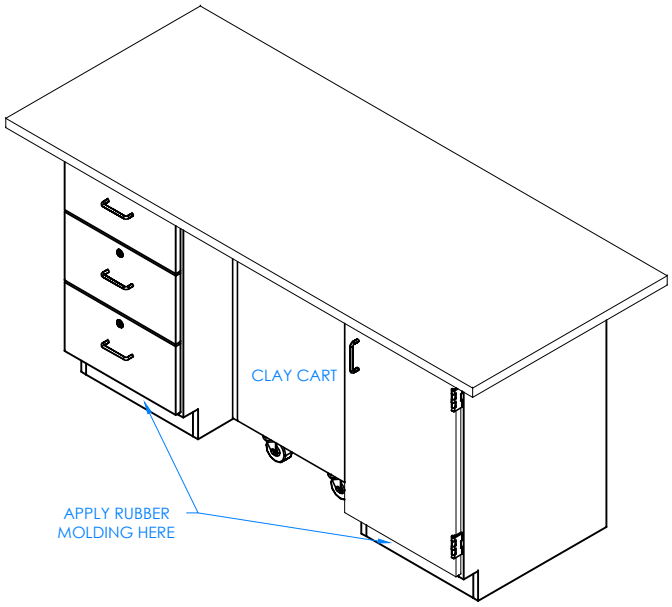

COMPLETE UNIT SHOWN

STEP 1:

POSITION THE CABINETS IN YOUR DESIRED LOCATION. LEAVE ENOUGH ROOM IN BETWEEN CABINETS FOR CLAY CART. LEVEL CABINETS AND ATTACH TO WALL. CABINETS MUST BE LEVELED OR DOORS AND DRAWERS MAY NOT OPEN OR CLOSE CORRECTLY . INSERT SHELF CLIPS IN DESIRED LOCATION. PLACE SHELF ON CLIPS, MAKING SURE IT IS LEVEL.

STEP 2:

APPLY SILICONE ADHESIVE TO TOP EDGES OF CABINETS. PLACE TOP ON CABINETS WITH PROPER OVERHANG (6" OVERHANG ON SIDES AND 4" ON FRONT AND BACK). CLAMP ON TOP TO CABINET TOPS TO REMOVE ANY WARP USING SHIMS AND C-CLAMPS, IF NEEDED, WHEN ALIGNING THE TOP (DO THIS BEFORE ADHESIVE ON EDGES SETS UP). LET CURE FOR 6-12 HOURS.

STEP 3:

ATTACH THE RUBBER BASE MOLDING USING CONTACT CEMENT. ONCE MOLDING IS IN PLACE, SCREW STAINLESS STEEL CORNER BRACKETS ON EACH CORNER OVER THE BASE MOLDING. SEE C-38 ASSEMBLY INSTRUCTIONS ON HOW TO ASSEMBLY CLAY CART.

NOTE:

1.

DWN BY:	EMK	DWN DATE:	2/18/14	
APR BY:		DATE APR:		
APR BY:		DATE APR:		

UNLESS OTHERWISE SPECIFIED DIMENSION ARE IN INCHES
CABINET SQUARENESS ± .0625
FRACTIONAL VALUES ± 1/32"
- ALL VALUES ± OVERALL -

REV.	DESCRIPTION	DATE	NAME	ECN NO.
A	CREATED ASSEMBLY INSTRUCTIONS	2/18/14	EMK	-

REVISION LEVEL

THIS DRAWING IS THE SOLE PROPERTY OF DIVERSIFIED WOOD CRAFTS. IT MAY NOT BE ALTERED OR CHANGED WITHOUT PERMISSION

CERAMIC WORK CENTER
ASSEMBLY INSTRUCTIONS

DRAWING NUMBER:	SCALE:	SHEET:	REVISION:
CWC-72P	NTS	3 OF 3	REV A