ASSEMBLY TEMPLATE

STORAGE CABINET TABLES-SINGLE

2100K, C2100K, 2200K, & C2200K SERIES

ASSEMBLY INSTRUCTIONS

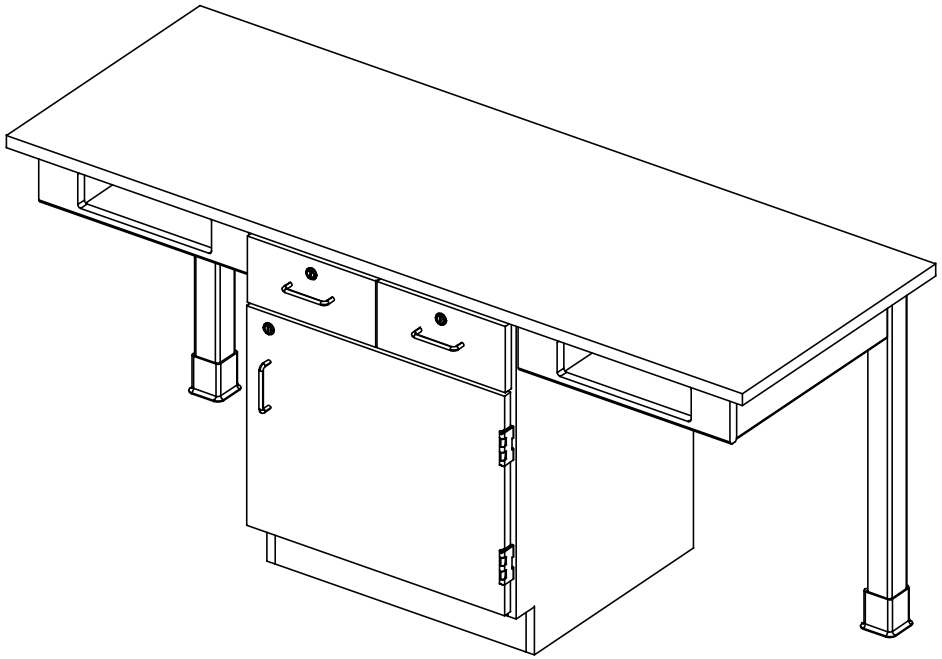

NOTE:

1. MODEL VIEWS MAY NOT REPRESENT EXACT MODEL PURCHASED

B	SEPERATED SINGLE UNITS FROM DOUBLE UNITS	10/26/16	EMK	-
A	CREATED DRAWING	3/15/16	EMK	-
REV.	DESCRIPTION	DATE	NAME	ECN NO.
REVISION LEVEL				

DWN BY:	EMK	DWN DATE:	3/15/16
APR BY:		DATE APR:	
APR BY:		DATE APR:	

UNLESS OTHERWISE SPECIFIED
DIMENSION ARE IN INCHES

CABINET SQUARENESS ± .0625
FRACTIONAL VALUES ± 1/32"
- ALL VALUES ± OVERALL -

THIS DRAWING IS THE SOLE PROPERTY OF DIVERSIFIED WOOD CRAFTS. IT MAY NOT BE ALTERED OR CHANGED WITHOUT PERMISSION

ASSEMBLY TEMPLATE

TOOLS REQUIRED
½" WRENCH
½" SOCKET AND TORQUE WRENCH - OPTIONAL
CONTACT CEMENT
SCREW DRIVER

ASSEMBLY COMPONENTS

ITEMS INCLUDED	PART #	PART DESCRIPTION	QTY
CABINET ASSEMBLY	VARIES	CABINET STYLES VARY WITH CHOICE OF TABLE STYLE	1
TOP AND APRON ASSEMBLY	N/A	TOP ASSEMBLY (FACTORY ASSEMBLED)	1
LEGS	500100	LEG,OAK 2.25X2.25X28.25	2
LEG HARDWARE	520001	LEG HARDWARE KIT, 1 LEG	2
LEG BOOT	100076	LEG BOOT,BLK,RUBBER	2
RUBBER BASE MOLDING	100283	RUBBER BASE MOLDING(SOLD BY FOOT)	7.5
STAINLESS STEEL CORNERS	100057	CORNERS-STAINLESS STEEL,BASE	4
SCREWS - BASE	100064	SCREW,#6X½ PTH SMS SS SCREW	16

NOTE:

1.

REV.	DESCRIPTION	DATE	NAME	ECN NO.
B	SEPERATED SINGLE UNITS FROM DOUBLE UNITS	10/26/16	EMK	-
A	CREATED DRAWING	3/15/16	EMK	-

REVISION LEVEL

DWN BY:	EMK	DWN DATE:	3/15/16
APR BY:		DATE APR:	
APR BY:		DATE APR:	

UNLESS OTHERWISE SPECIFIED DIMENSION ARE IN INCHES

CABINET SQUARENESS ± .0625
FRACTIONAL VALUES ± 1/32"
- ALL VALUES ± OVERALL -

THIS DRAWING IS THE SOLE PROPERTY OF DIVERSIFIED WOOD CRAFTS. IT MAY NOT BE ALTERED OR CHANGED WITHOUT PERMISSION

TITLE:
STORAGE CABINET TABLES-SINGLE
TOOLS AND ASSEMBLY COMPONENTS

DRAWING NUMBER:	SCALE:	SHEET:	REVISION:
STORAGE CABINET TABLES	NTS	2 OF 3	REV B

ASSEMBLY TEMPLATE

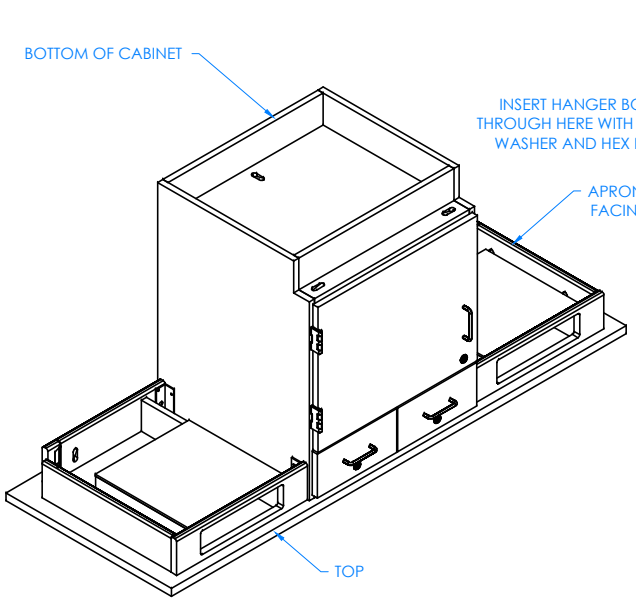

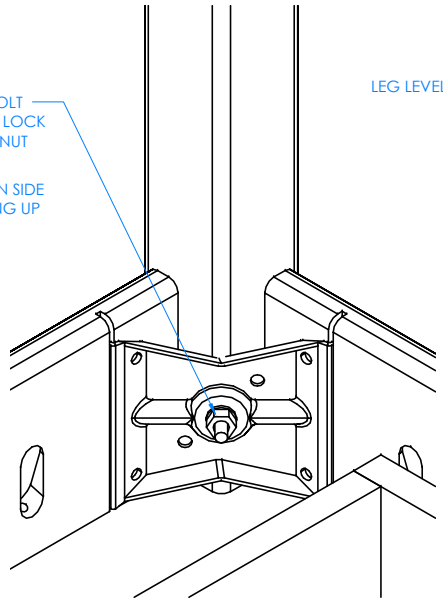

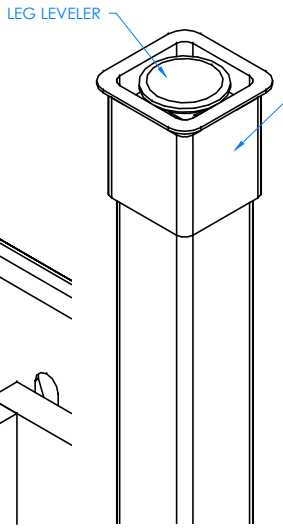

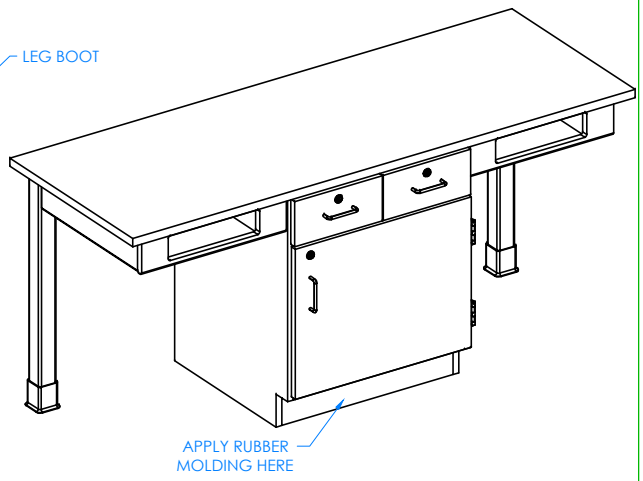

STEP 1:

LAY THE TABLE ON THE FLOOR, WITH APRON SIDE AND BOTTOM OF CABINET FACING UP. BE SURE TOP ASSEMBLY IS ON A CLEAN SURFACE TO PREVENT DAMAGE. YOU WILL NEED TWO OR THREE OTHER PEOPLE TO HELP WITH THIS STEP, AS TOP ASSEMBLY WILL BE HEAVY.

STEP 2:

INSERT HANGER BOLT ON ONE OF THE LEGS THROUGH THE CORNER BRACKET AND INSERT LOCK WASHER AND HEX NUT. TIGHTEN NUT USING A ½" WRENCH OR ½" SOCKET AND TORQUE WRENCH, TO A MINIMUM OF 12FT LBS BUT NOT TO EXCEED 17FT LBS. REPEAT FOR OTHER LEG.

STEP 3:

SLIDE LEG BOOTS ONTO LEGS WITH FLARED END TOWARD THE BOTTOM OF LEG. SCREW LEG LEVELERS INTO T-NUT ON BOTTOM OF THE LEG.

STEP 4:

TURN UNIT OVER ONTO LEGS. SET TABLE IN PLACE AND ADJUST LEG LEVELERS TO LEVEL THE TABLE. ATTACH RUBBER MOLDING TO BASE OF CABINET USING CONTACT CEMENT. AFTER MOLDING IS IN PLACE, SCREW STAINLESS STEEL CORNER BRACKETS ON EACH CORNER OVER BASE MOLDING WITH THE SCREWS PROVIDED.

NOTE:

1.

REV.	DESCRIPTION	DATE	NAME	ECN NO.
B	SEPERATED SINGLE UNITS FROM DOUBLE UNITS	10/26/16	EMK	-
A	CREATED DRAWING	3/15/16	EMK	-
REVISION LEVEL				

DWN BY:	EMK	DWN DATE:	3/15/16
APR BY:		DATE APR:	
APR BY:		DATE APR:	

UNLESS OTHERWISE SPECIFIED DIMENSION ARE IN INCHES

CABINET SQUARENESS ± .0625
FRACTIONAL VALUES ± 1/32"
- ALL VALUES ± OVERALL -

THIS DRAWING IS THE SOLE PROPERTY OF DIVERSIFIED WOOD CRAFTS. IT MAY NOT BE ALTERED OR CHANGED WITHOUT PERMISSION

STORAGE CABINET TABLES-SINGLE ASSEMBLY INSTRUCTIONS

DRAWING NUMBER:	SCALE:	SHEET:	REVISION:
STORAGE CABINET TABLES	NTS	3 OF 3	REV B