IN HOUSE ASSEMBLY TEMPLATE

ADJUSTABLE HEIGHT TABLE (KOYO LEGS)

P8 SERIES, ALT SERIES, & ALTD SERIES

ASSEMBLY INSTRUCTIONS

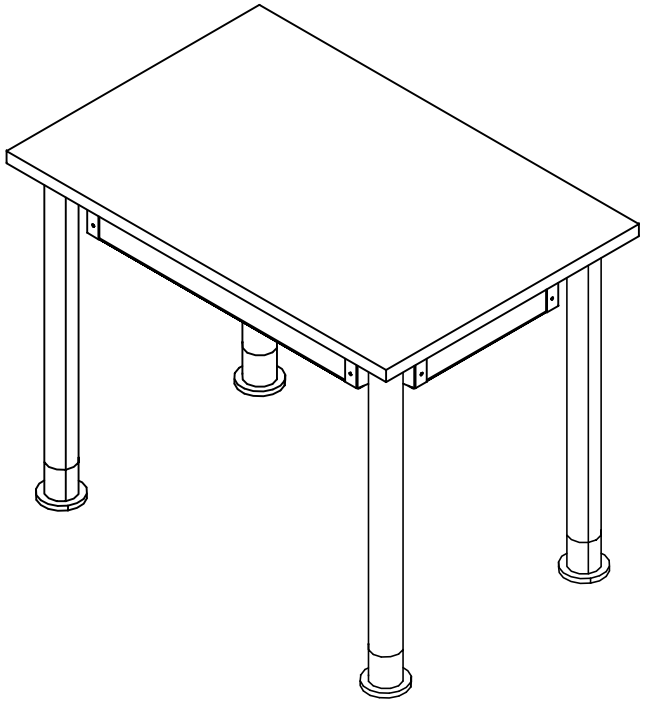

NOTE:

1. MODEL VIEWS MAY NOT REPRESENT EXACT MODEL PURCHASED

DWN BY:	EMK	DWN DATE:	3/12/14
APR BY:		DATE APR:	
APR BY:		DATE APR:	

UNLESS OTHERWISE SPECIFIED DIMENSION ARE IN INCHES

CABINET SQUARENESS ± .0625
FRACTIONAL VALUES ± 1/32"
- ALL VALUES ± OVERALL -

TITLE: ADJUSTABLE HEIGHT TABLE (KOYO LEGS) ASSEMBLY INSTRUCTIONS

REV.	DESCRIPTION	DATE	NAME	ECN NO.
A	CREATED ASSEMBLY INSTRUCTIONS	3/12/14	EMK	-

REVISION LEVEL

THIS DRAWING IS THE SOLE PROPERTY OF DIVERSIFIED WOOD CRAFTS. IT MAY NOT BE ALTERED OR CHANGED WITHOUT PERMISSION

DRAWING NUMBER:	SCALE:	SHEET:	REVISION:
P8, ALT, & ALTD SERIES	NTS	1 OF 3	REV A

TOOLS REQUIRED
#3 PHILLIPS SCREW DRIVER
#3 SQUARE HEAD - OPTIONAL

ASSEMBLY COMPONENTS

ITEMS INCLUDED	PART #	PART DESCRIPTION	QTY
TOP ASSEMBLY	N/A	TOP ASSEMBLY-1" OR 1¼" TABLE TOP (FACTORY ASSEMBLED)	1
LEG	100677	KOYO ADJ. LEG SET,SILVER	4
LEG SPACER	100678	KOYO ADJ. LEG SPACER	4
LEG LEVLER	100679	KOYO ADJ. LEG LEVELER,90MM	4
SCREWS - LEGS (1" TOP)	100369	SCREW,#12X⅞" PHIL PAN HEAD SM	24
SCREWS - LEGS (1¼" TOP)	214647	SCREW,#12X1⅛" PHIL PAN HEAD SMS ZINC	24

NOTE:

1.

REV.	DESCRIPTION	DATE	NAME	ECN NO.
A	CREATED ASSEMBLY INSTRUCTIONS	3/12/14	EMK	-

REVISION LEVEL

DWN BY:	EMK	DWN DATE:	3/12/14
APR BY:		DATE APR:	
APR BY:		DATE APR:	

UNLESS OTHERWISE SPECIFIED DIMENSION ARE IN INCHES
CABINET SQUARENESS ± .0625
FRACTIONAL VALUES ± 1/32"
- ALL VALUES ± OVERALL -

THIS DRAWING IS THE SOLE PROPERTY OF DIVERSIFIED WOOD CRAFTS. IT MAY NOT BE ALTERED OR CHANGED WITHOUT PERMISSION

ADJUSTABLE HEIGHT TABLE (KOYO LEGS)
TOOLS AND ASSEMBLY COMPONENTS

DRAWING NUMBER:	SCALE:	SHEET:	REVISION:
P8, ALT, & ALTD SERIES	NTS	2 OF 3	REV A

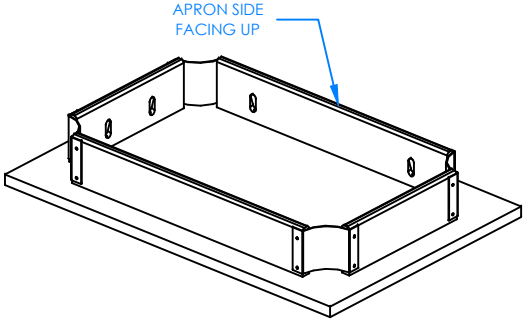

STEP 1:

INSPECT ALL COMPONENTS FOR SHIPPING DAMAGE . LAY TOP ASSEMBLY ON FLOOR WITH APRON SIDE FACING UP. BE SURE TOP ASSEMBLY IS ON A CLEAN SURFACE TO PREVENT DAMAGE.

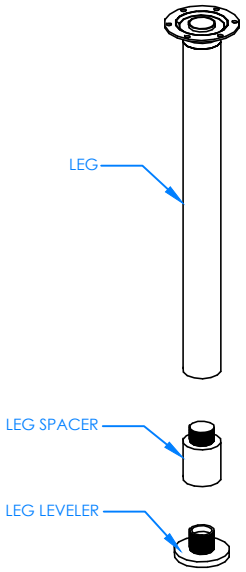

STEP 2:

TURN THE LEG SPACERS INTO THE BOTTOM OF THE ADJUSTABLE LEG. TURN THE LEG LEVELERS INTO THE BOTTOM OF THE LEG SPACERS.

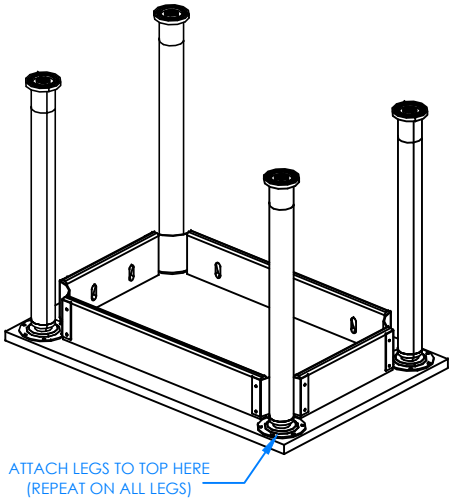

STEP 3:

TAKE EACH OF THE TABLE LEGS AND SCREW THEM INTO THE BOTTOM OF THE TABLE THROUGH THE PREDRILLED HOLES WITH THE SCREWS PROVIDED. MAKE SURE EACH LEG IS SCREWED ON TIGHT USING A MAXIMUM OF 45IN LBS OF TORQUE.

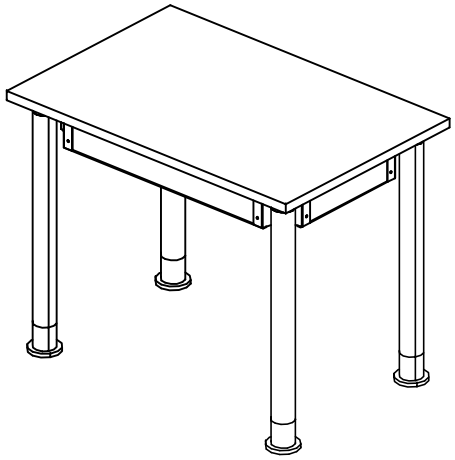

STEP 4:

TURN TABLE OVER SO TOP IS UP. SET YOUR TABLE IN PLACE AND ADJUST THE LEGS TO DESIRED HEIGHT AND LEVELERS TO LEVEL TABLE. SEE NOTE ON HOW TO ADJUST HEIGHT OF TABLE. WHEN MOVING TABLE, CARRY IT. DO NOT DRAG OR PUSH THE TABLE ACROSS THE FLOOR ON LEG LEVELERS.

NOTE:

1. TO INCREASE THE HEIGHT OF THE TABLE, PUT TABLE ON SIDE OR BACK AND SIMPLY PULL ON THE BOTTOM OF EACH LEG.
2. TO DECREASE THE HEIGHT OF THE TABLE, PUT TABLE ON SIDE OR BACK AND MOVE THE ADJUSTABLE LEG TO THE HIGHEST SETTING. IT WILL START TO RELEASE. PUSH THE LEG BACK TO A LOWER SETTING.

DWN BY:	EMK	DWN DATE:	3/12/14	
APR BY:		DATE APR:		
APR BY:		DATE APR:		

UNLESS OTHERWISE SPECIFIED DIMENSION ARE IN INCHES
CABINET SQUARENESS ± .0625
FRACTIONAL VALUES ± 1/32"
- ALL VALUES ± OVERALL -

REV.	DESCRIPTION	DATE	NAME	ECN NO.
A	CREATED ASSEMBLY INSTRUCTIONS	3/12/14	EMK	-

REVISION LEVEL

THIS DRAWING IS THE SOLE PROPERTY OF DIVERSIFIED WOOD CRAFTS. IT MAY NOT BE ALTERED OR CHANGED WITHOUT PERMISSION

ADJUSTABLE HEIGHT TABLE (KOYO LEGS)
ASSEMBLY INSTRUCTIONS

DRAWING NUMBER:	SCALE:	SHEET:	REVISION:
P8, ALT, & ALTD SERIES	NTS	3 OF 3	REV A