IN HOUSE ASSEMBLY TEMPLATE

INTERACTIVE MOBILE MEDIA CABINET

4544 (OAK OR MAPLE)
ASSEMBLY INSTRUCTIONS

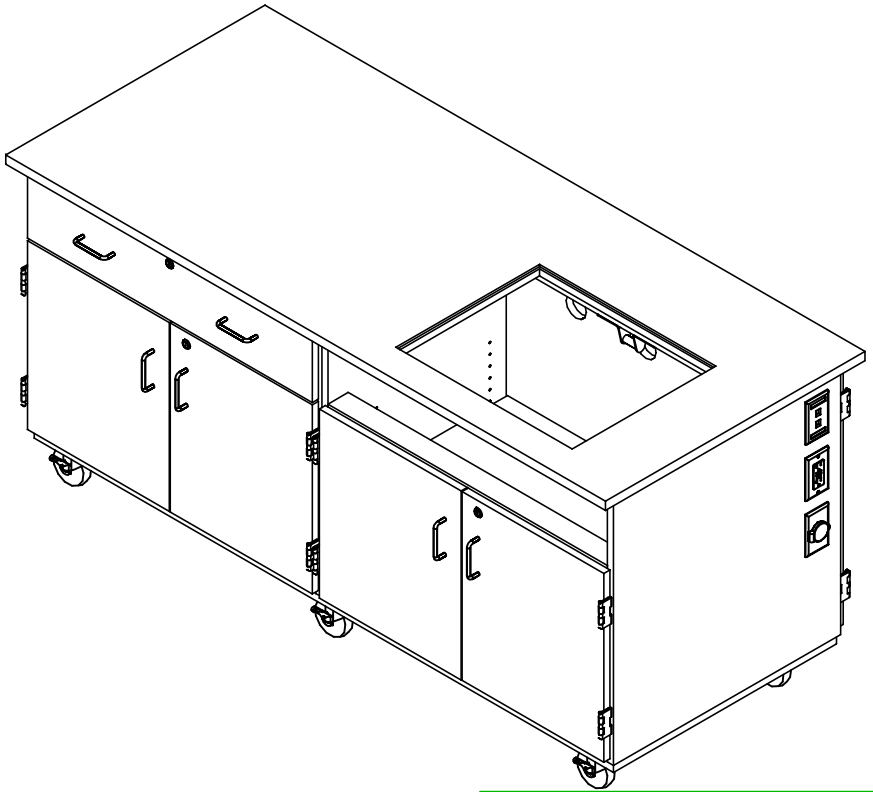

NOTE:

1. MODEL VIEWS MAY NOT REPRESENT EXACT MODEL PURCHASED

REV.	DESCRIPTION	DATE	NAME	ECN NO.
A	CREATED ASSEMBLY INSTRUCTIONS	2/10/15	EMK	-
REVISION LEVEL				

ALL DIMENSIONS ARE IN INCHES UNLESS NOTED OTHERWISE	DWN BY: EMK	DATE DWN:	2/10/15
CABINET SQUARENESS = ± .0625 FRACTIONAL VALUES = ± 1/32" - ALL VALUES ± OVERALL -	APR BY:	DATE APR:	
	APR BY:	DATE APR:	

CONFIDENTIAL:
ALL DESIGN RIGHTS RESERVED
THE INFORMATION, DATA, DESIGN, AND DRAWINGS EMBODIED IN THIS DOCUMENT AND ALL REPRODUCTIONS THEREOF ARE THE EXCLUSIVE PROPERTY OF DIVERSIFIED WOODCRAFTS, INC.

THESE DOCUMENTS ARE SUPPLIED WITH THE UNDERSTANDING THAT THEY WILL NOT BE DISCLOSED TO THIRD PARTIES WITHOUT WRITTEN CONSENT OF DIVERSIFIED WOODCRAFTS, INC. ANY REPRODUCTION IN PART OR WHOLE WITHOUT WRITTEN CONSENT IS SUBJECT TO LEGAL ACTION.

DIVERSIFIED WOODCRAFTS, INC
300 South Krueger Street
Suring, WI 54174
diversifiedwoodcrafts.com

TITLE:
INTERACTIVE MOBILE MEDIA CABINET
ASSEMBLY INSTRUCTIONS

DRAWING NUMBER:	SCALE:	SHEET:	REVISION:
4544	NTS	1 OF 7	REV A

TOOLS REQUIRED
DRILL
SILICONE ADHESIVE

ASSEMBLY COMPONENTS

ITEMS INCLUDED	PART #	PART DESCRIPTION	QTY
CABINET	N/A	CABINET - 72"W X 28"D X 35"H	1
TOP	240593	TOP,PHENOLIC,1.00X32X74,BLK	1
MONITOR ARM	232917	ARM,FLAT PANEL,NOVA FPA-8-2006	1
KEYBOARD TRAY	240671	TRAY,KEYBOARD,SLIDE OUT,#632.67.300	1
EXTENSION CORD	100036	ELECTRICAL EXTENSION CORD	1
PLEXIGLASS COVER	241061	COVER PANEL,LEXAN .25X17.69X21.69	1
TOP	240594	TOP,PHENOLIC,0.25X17.69X21.69	1

NOTE:

1.

REV.	DESCRIPTION	DATE	NAME	ECN NO.
A	CREATED ASSEMBLY INSTRUCTIONS	2/10/15	EMK	-

REVISION LEVEL

ALL DIMENSIONS ARE IN INCHES UNLESS NOTED OTHERWISE

CABINET SQUARENESS = ± .0625
FRACTIONAL VALUES = ± 1/32"
- ALL VALUES ± OVERALL -

DWN BY:	EMK	DATE DWN:	2/10/15
APR BY:		DATE APR:	
APR BY:		DATE APR:	

CONFIDENTIAL:
ALL DESIGN RIGHTS RESERVED
THE INFORMATION, DATA, DESIGN, AND DRAWINGS EMBODIED IN THIS DOCUMENT AND ALL REPRODUCTIONS THEREOF ARE THE EXCLUSIVE PROPERTY OF DIVERSIFIED WOODCRAFTS, INC.

THESE DOCUMENTS ARE SUPPLIED WITH THE UNDERSTANDING THAT THEY WILL NOT BE DISCLOSED TO THIRD PARTIES WITHOUT WRITTEN CONSENT OF DIVERSIFIED WOODCRAFTS, INC. ANY REPRODUCTION IN PART OR WHOLE WITHOUT WRITTEN CONSENT IS SUBJECT TO LEGAL ACTION.

DIVERSIFIED WOODCRAFTS, INC
300 South Krueger Street
Suring, WI 54174
diversifiedwoodcrafts.com

TITLE:
INTERACTIVE MOBILE MEDIA CABINET
TOOLS AND ASSEMBLY COMPONENTS

DRAWING NUMBER:	SCALE:	SHEET:	REVISION:
4544	NTS	2 OF 7	REV A

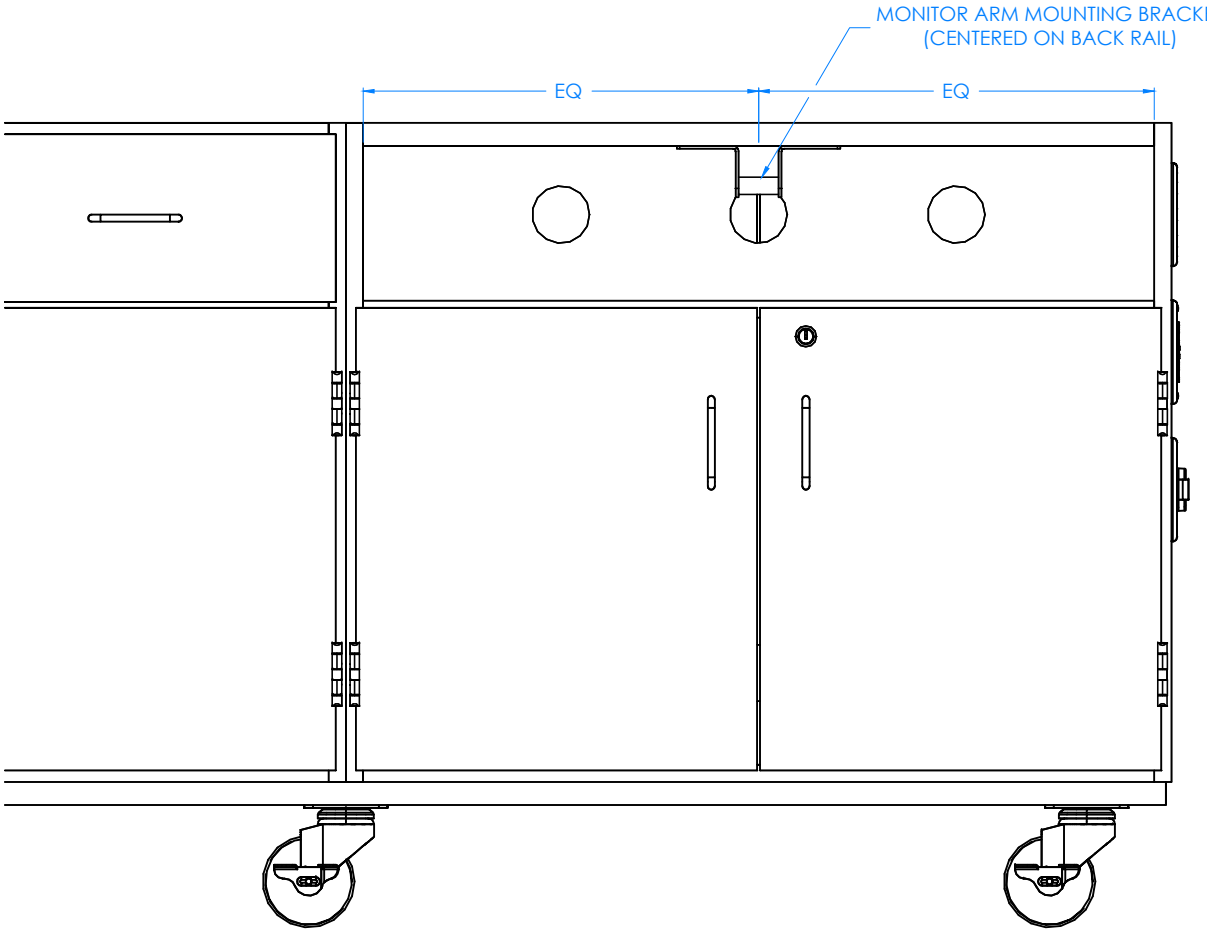

FRONT VIEW OF MOBILE LAB

STEP 1:

- ATTACH MOUNTING BRACKET FOR MONITOR ARM TO BACK RAIL WITH HARDWARE PROVIDED.
- BRACKET NEEDS TO BE FLUSH TO EDGE OF RAIL AND CENTERED IN CABINET.

NOTE:

1.

REV.	DESCRIPTION	DATE	NAME	ECN NO.
A	CREATED ASSEMBLY INSTRUCTIONS	2/10/15	EMK	-
REVISION LEVEL				

ALL DIMENSIONS ARE IN INCHES UNLESS NOTED OTHERWISE

CABINET SQUARENESS = ± .0625
FRACTIONAL VALUES = ± 1/32"
- ALL VALUES ± OVERALL -

DWN BY:	EMK	DATE DWN:	2/10/15
APR BY:		DATE APR:	
APR BY:		DATE APR:	

CONFIDENTIAL:
ALL DESIGN RIGHTS RESERVED
THE INFORMATION, DATA, DESIGN, AND DRAWINGS EMBODIED IN THIS DOCUMENT AND ALL REPRODUCTIONS THEREOF ARE THE EXCLUSIVE PROPERTY OF DIVERSIFIED WOODCRAFTS, INC.

THESE DOCUMENTS ARE SUPPLIED WITH THE UNDERSTANDING THAT THEY WILL NOT BE DISCLOSED TO THIRD PARTIES WITHOUT WRITTEN CONSENT OF DIVERSIFIED WOODCRAFTS, INC. ANY REPRODUCTION IN PART OR WHOLE WITHOUT WRITTEN CONSENT IS SUBJECT TO LEGAL ACTION.

DIVERSIFIED WOODCRAFTS, INC
300 South Krueger Street
Suring, WI 54174
diversifiedwoodcrafts.com

TITLE:
INTERACTIVE MOBILE MEDIA CABINET
ASSEMBLY INSTRUCTIONS

DRAWING NUMBER:	SCALE:	SHEET:	REVISION:
4544	NTS	3 OF 7	REV A

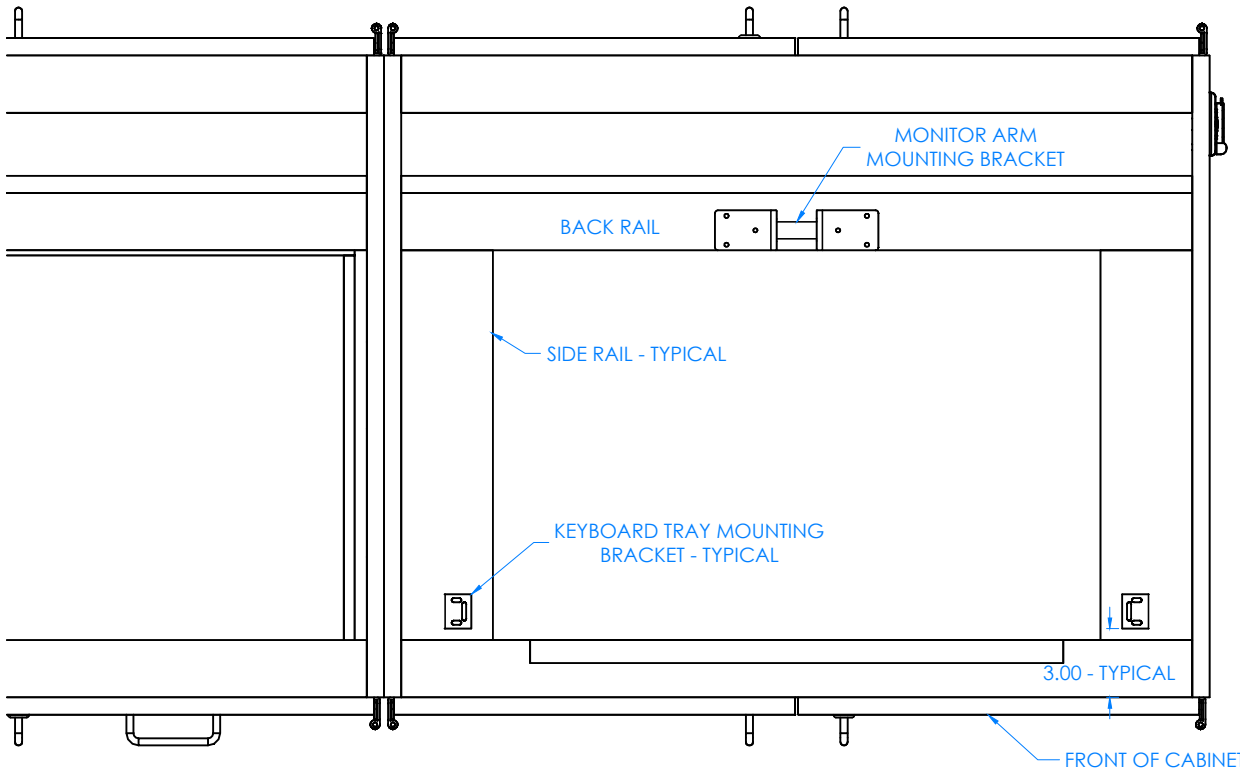

TOP VIEW OF MOBILE LAB

STEP 2:

- ATTACH KEYBOARD TRAY MOUNTING BRACKETS TO SIDE RAILS WITH HARDWARE PROVIDED.
- BRACKETS NEED TO BE CENTERED IN WIDTH OF CABINET AND 3" FROM FRONT OF MOBILE CABINET.

NOTE:

1.

REV.	DESCRIPTION	DATE	NAME	ECN NO.
A	CREATED ASSEMBLY INSTRUCTIONS	2/10/15	EMK	-

REVISION LEVEL

ALL DIMENSIONS ARE IN INCHES UNLESS NOTED OTHERWISE

CABINET SQUARENESS = ± .0625
FRACTIONAL VALUES = ± 1/32"
- ALL VALUES ± OVERALL -

DWN BY:	EMK	DATE DWN:	2/10/15
APR BY:		DATE APR:	
APR BY:		DATE APR:	

CONFIDENTIAL:
ALL DESIGN RIGHTS RESERVED
THE INFORMATION, DATA, DESIGN, AND DRAWINGS EMBODIED IN THIS DOCUMENT AND ALL REPRODUCTIONS THEREOF ARE THE EXCLUSIVE PROPERTY OF DIVERSIFIED WOODCRAFTS, INC.

THESE DOCUMENTS ARE SUPPLIED WITH THE UNDERSTANDING THAT THEY WILL NOT BE DISCLOSED TO THIRD PARTIES WITHOUT WRITTEN CONSENT OF DIVERSIFIED WOODCRAFTS, INC. ANY REPRODUCTION IN PART OR WHOLE WITHOUT WRITTEN CONSENT IS SUBJECT TO LEGAL ACTION.

DIVERSIFIED WOODCRAFTS, INC
300 South Krueger Street
Suring, WI 54174
diversifiedwoodcrafts.com

TITLE:
INTERACTIVE MOBILE MEDIA CABINET
ASSEMBLY INSTRUCTIONS

DRAWING NUMBER:	SCALE:	SHEET:	REVISION:
4544	NTS	4 OF 7	REV A

STEP 3:

- APPLY SILICONE ADHESIVE ON TOP EDGES AND ON INSIDE RAILS.
- PLACE TOP ON UNIT WITH PROPER OVERHANG (1" OVERHANG ON SIDES AND 2" ON FRONT AND BACK). TOP IS CENTERED AT THOSE DIMENSIONS.
- ALLOW UNIT TO SIT FOR 24 HOURS BEFORE USING TO ALLOW SILICONE TO CURE.

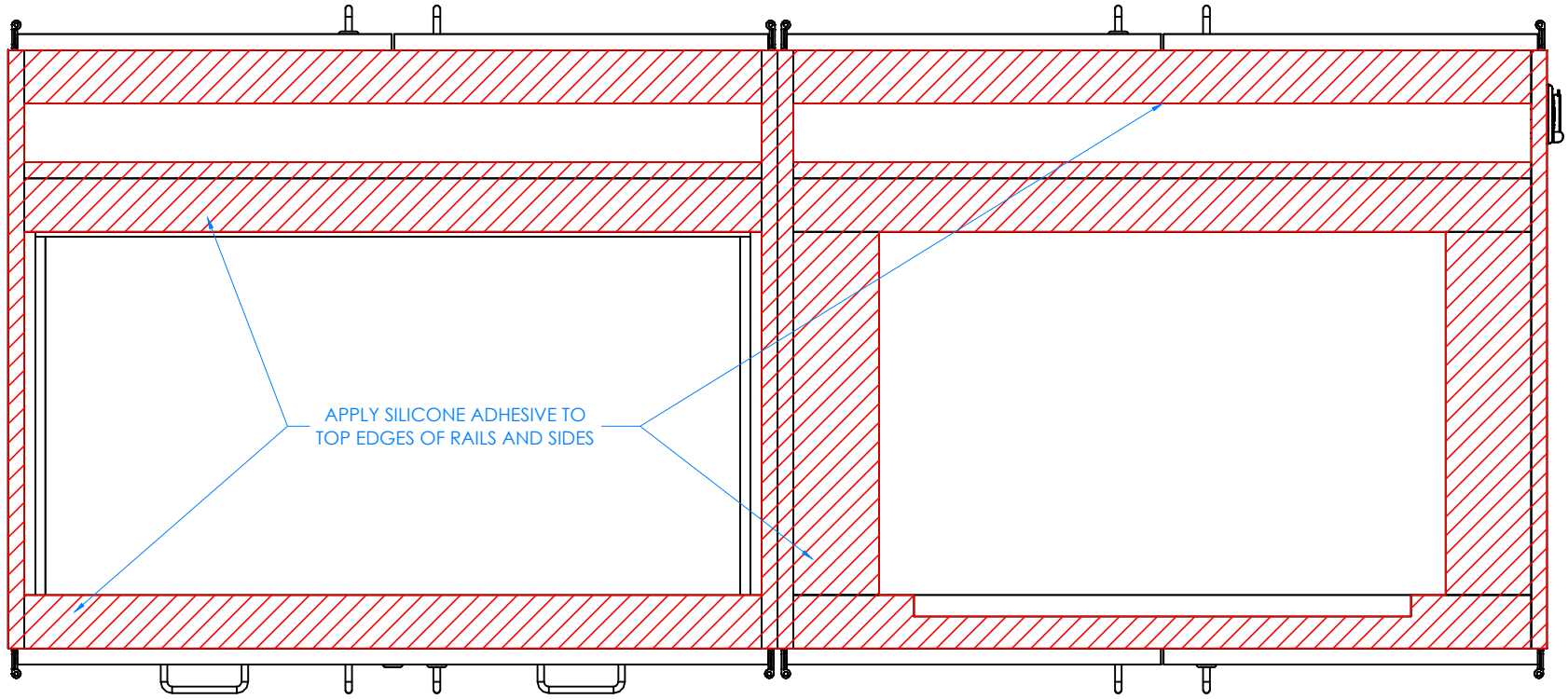

TOP VIEW OF MOBILE LAB

NOTE:

1.

REV.	DESCRIPTION	DATE	NAME	ECN NO.
A	CREATED ASSEMBLY INSTRUCTIONS	2/10/15	EMK	-

REVISION LEVEL

ALL DIMENSIONS ARE IN INCHES UNLESS NOTED OTHERWISE

CABINET SQUARENESS = ± .0625
FRACTIONAL VALUES = ± 1/32"
- ALL VALUES ± OVERALL -

DWN BY:	EMK	DATE DWN:	2/10/15
APR BY:		DATE APR:	
APR BY:		DATE APR:	

CONFIDENTIAL:
ALL DESIGN RIGHTS RESERVED
THE INFORMATION, DATA, DESIGN, AND DRAWINGS EMBODIED IN THIS DOCUMENT AND ALL REPRODUCTIONS THEREOF ARE THE EXCLUSIVE PROPERTY OF DIVERSIFIED WOODCRAFTS, INC.

THESE DOCUMENTS ARE SUPPLIED WITH THE UNDERSTANDING THAT THEY WILL NOT BE DISCLOSED TO THIRD PARTIES WITHOUT WRITTEN CONSENT OF DIVERSIFIED WOODCRAFTS, INC. ANY REPRODUCTION IN PART OR WHOLE WITHOUT WRITTEN CONSENT IS SUBJECT TO LEGAL ACTION.

DIVERSIFIED WOODCRAFTS, INC
300 South Krueger Street
Suring, WI 54174
diversifiedwoodcrafts.com

TITLE:
INTERACTIVE MOBILE MEDIA CABINET
ASSEMBLY INSTRUCTIONS

DRAWING NUMBER:	SCALE:	SHEET:	REVISION:
4544	NTS	5 OF 7	REV A

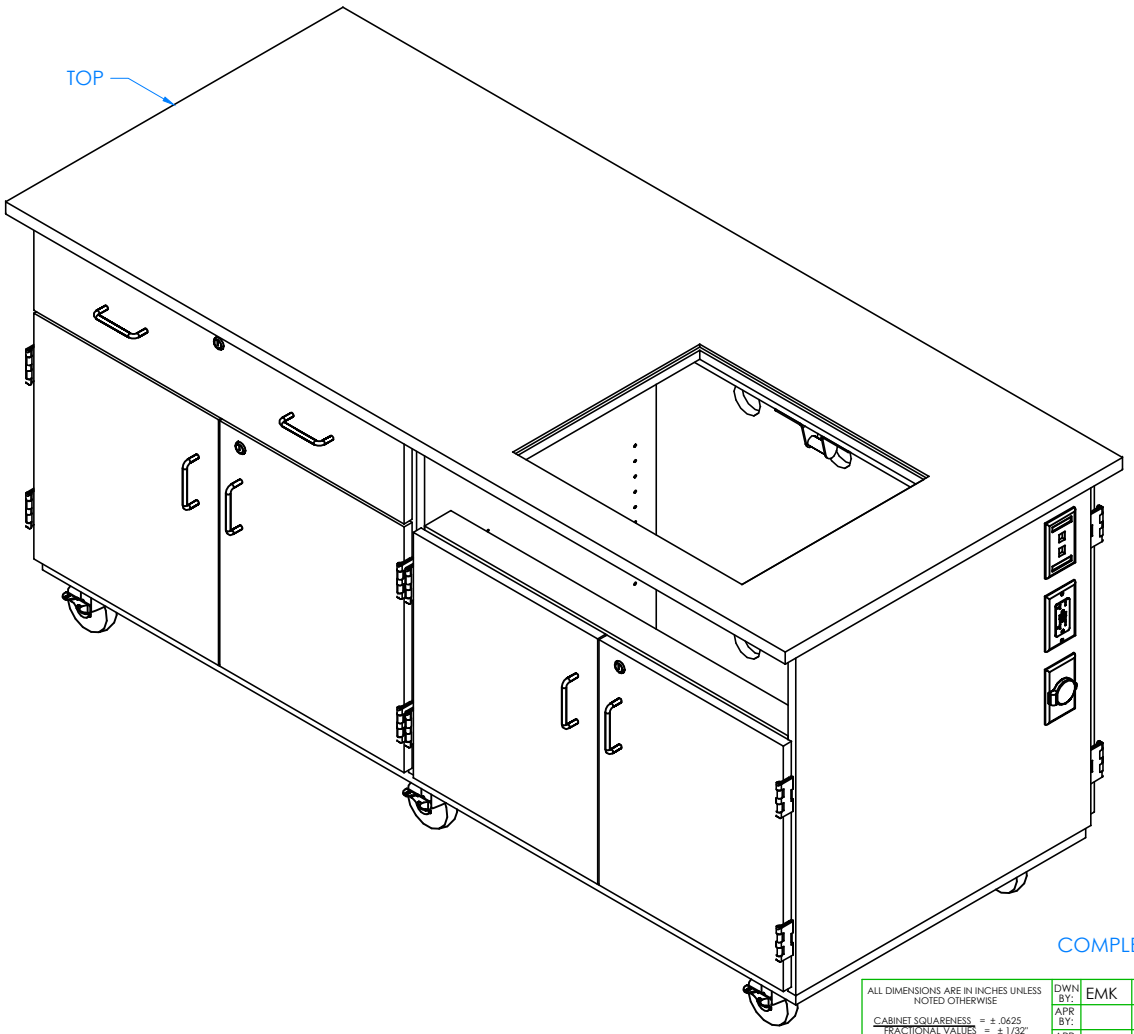

COMPLETE UNIT SHOWN

STEP 4:

- SET PLEXIGLASS COVER AND REMOVABLE TOP IN PLACE (NOT SHOWN).
- PLACE UNIT IN DESIRED LOCATION.

NOTE:

1.

REV.	DESCRIPTION	DATE	NAME	ECN NO.
A	CREATED ASSEMBLY INSTRUCTIONS	2/10/15	EMK	-

REVISION LEVEL

ALL DIMENSIONS ARE IN INCHES UNLESS NOTED OTHERWISE

CABINET SQUARENESS = ± .0625
FRACTIONAL VALUES = ± 1/32"
- ALL VALUES ± OVERALL -

DWN BY:	EMK	DATE DWN:	2/10/15
APR BY:		DATE APR:	
APR BY:		DATE APR:	

CONFIDENTIAL:
ALL DESIGN RIGHTS RESERVED
THE INFORMATION, DATA, DESIGN, AND DRAWINGS EMBODIED IN THIS DOCUMENT AND ALL REPRODUCTIONS THEREOF ARE THE EXCLUSIVE PROPERTY OF DIVERSIFIED WOODCRAFTS, INC.

THESE DOCUMENTS ARE SUPPLIED WITH THE UNDERSTANDING THAT THEY WILL NOT BE DISCLOSED TO THIRD PARTIES WITHOUT WRITTEN CONSENT OF DIVERSIFIED WOODCRAFTS, INC. ANY REPRODUCTION IN PART OR WHOLE WITHOUT WRITTEN CONSENT IS SUBJECT TO LEGAL ACTION.

DIVERSIFIED WOODCRAFTS, INC
300 South Krueger Street
Suring, WI 54174
diversifiedwoodcrafts.com

TITLE:
INTERACTIVE MOBILE MEDIA CABINET
ASSEMBLY INSTRUCTIONS

DRAWING NUMBER:	SCALE:	SHEET:	REVISION:
4544	NTS	6 OF 7	REV A

TROUBLESHOOTING YOUR GFCI ELECTRICAL RECEPTACLE:

PLEASE NOTE: THROUGHOUT ANY OF THE FOLLOWING STEPS (PROCEDURES); IF YOU ARE NOT SURE YOU CAN DO THIS JOB SAFELY, AND COMPETENTLY, REFER THIS WORK TO QUALIFIED PROFESSIONAL!

If your unit comes equipped with a GFCI (Ground Fault Circuit Interrupter) electrical receptacle, and there is no power in the receptacle please consider/check the following:

- The extension cord (if being used) is working properly.
- The breaker hasn't been tripped, or turned off.

This type of GFCI has two testing-related buttons on it. One button is appropriately labeled "TEST", and the other button is labeled "RESET". To test the GFCI receptacle follow these steps:

- Plug in an appliance (lamp or night light) into the outlet. The light should now be on. Then press the "TEST" button on the GFCI. The GFCI "RESET" button should pop out, and the light should go out.
- If the "RESET" button pops out, but the light doesn't go out, the GFCI has been improperly wired. In this case please contact a certified professional. There may also be a problem with other wiring in the same circuit.
- If the "RESET" button doesn't pop out, the GFCI is defective, or malfunctioned, and should be replaced.
- If the GFCI is functioning properly, and the lamp goes out, press the "RESET" button to restore power to the outlet.

Conversely, if you have a GFI that has tripped (which is common) and it will not reset, you may have a wiring short in the circuit, a defective appliance on the circuit, or the GFI itself has become defective. To test a tripping GFCI follow these steps:

- Remove every appliance connected to the GFCI's circuit and reset it. If it doesn't reset there may either be a wiring fault behind a socket outlet, or your GFCI itself has become faulty.
- Make sure whatever you are plugging into to the GFCI is dry and not damaged.
- Only plug in one item at a time. If you are plugging in a defective item it will cause the GFCI to trip, and that item therefore should be replaced.

If you are still having difficulty the easiest way to troubleshoot a GFI is to obtain a GFI tester, which is available at most hardware stores. It plugs into the GFI outlet, and will supply you with a "snapshot" of your connections, indicating wiring problems and/or the condition of the GFI. Another way to troubleshoot is to simply purchase a new GFI and install it.