ASSEMBLY TEMPLATE

3D PRINTER TABLE

3DP-3624 (OAK OR MAPLE)
ASSEMBLY INSTRUCTIONS

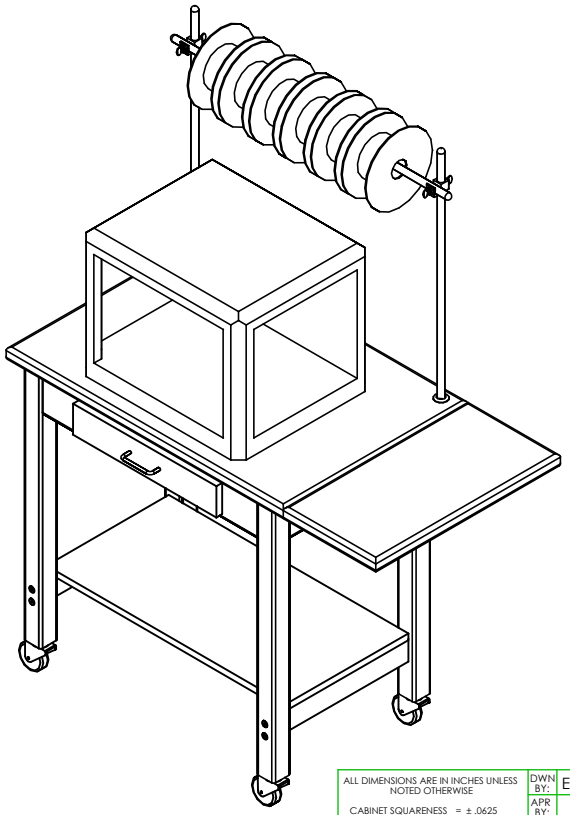

NOTE:

1. MODEL VIEWS MAY NOT REPRESENT EXACT MODEL PURCHASED

REV.	DESCRIPTION	DATE	NAME	ECN NO.
A	CREATED DRAWING	10/26/17	EMK	-
REVISION LEVEL				

ALL DIMENSIONS ARE IN INCHES UNLESS NOTED OTHERWISE CABINET SQUARENESS = ± .0625 FRACTIONAL VALUES = ± 1/32" - ALL VALUES ± OVERALL -	DWN BY: EMK	DATE DWN: 10/26/17	
	APR BY:	DATE APR:	
	APR BY:	DATE APR:	

CONFIDENTIAL:
ALL DESIGN RIGHTS RESERVED
THE INFORMATION, DATA, DESIGN, AND DRAWINGS EMBODIED IN THIS DOCUMENT AND ALL REPRODUCTIONS THEREOF ARE THE EXCLUSIVE PROPERTY OF DIVERSIFIED WOODCRAFTS, INC.

THESE DOCUMENTS ARE SUPPLIED WITH THE UNDERSTANDING THAT THEY WILL NOT BE DISCLOSED TO THIRD PARTIES WITHOUT WRITTEN CONSENT OF DIVERSIFIED WOODCRAFTS, INC. ANY REPRODUCTION IN PART OR WHOLE WITHOUT WRITTEN CONSENT IS SUBJECT TO LEGAL ACTION.

DIVERSIFIED WOODCRAFTS, INC
300 South Krueger Street
Suring, WI 54174
diversifiedwoodcrafts.com

TITLE:
3D PRINTER TABLE
ASSEMBLY INSTRUCTIONS

DRAWING NUMBER:	SCALE:	SHEET:	REVISION:
3DP-3624	NTS	1 OF 11	REV A

ASSEMBLY TEMPLATE

TOOLS REQUIRED

½" WRENCH
½" SOCKET AND TORQUE WRENCH - OPTIONAL
4MM ALLEN WRENCH
SCREW DRIVER

ASSEMBLY COMPONENTS

ITEMS INCLUDED	PART #	PART DESCRIPTION	QTY
TOP AND APRON ASSEMBLY	N/A	TOP ASSEMBLY (FACTORY ASSEMBLED)	1
LEGS WITH CASTERS	VARIES	LEG, (MATERIAL VARIES) 2.25X2.25X32.25	4
LEG BRACE	N/A	LEG BRACE - 0.75"THK X 2.50"W X 16"L	2
SHELF	N/A	SHELF - 0.75"THK X 15.875"W X 31.125"L	1
CONFIRMATS - LEGS	227578	SCREW,7MMX90MM,CONN,ALLENHEAD, BLACK	8
SCREWS - SHELF	100066	SCREW,#8X1.5 FSQ SMS TYPE 17	4
ROD SOCKET	206505	ROD SOCKET ASSY,SOCKET,WASHER,NUT	2
CROSSBAR	100094	ROD,CROSSBAR ¾ DIA.X36 L	2
UPRIGHT	100004	ROD,UPRIGHT ¾ DIA.X36 L	2
CLAMP	253011	ROD CLAMP ¾X¾ ASSY, NOTCHED FOR LIFT OUT BAR	2

NOTE:

1.

REV.	DESCRIPTION	DATE	NAME	ECN NO.
A	CREATED DRAWING	10/26/17	EMK	-
REVISION LEVEL				

ALL DIMENSIONS ARE IN INCHES UNLESS NOTED OTHERWISE

CABINET SQUARENESS = ± .0625
FRACTIONAL VALUES = ± 1/32"
- ALL VALUES ± OVERALL -

DWN BY:	EMK	DATE DWN:	10/26/17
APR BY:		DATE APR:	
APR BY:		DATE APR:	

CONFIDENTIAL:
ALL DESIGN RIGHTS RESERVED
THE INFORMATION, DATA, DESIGN, AND DRAWINGS EMBODIED IN THIS DOCUMENT AND ALL REPRODUCTIONS THEREOF ARE THE EXCLUSIVE PROPERTY OF DIVERSIFIED WOODCRAFTS, INC.

THESE DOCUMENTS ARE SUPPLIED WITH THE UNDERSTANDING THAT THEY WILL NOT BE DISCLOSED TO THIRD PARTIES WITHOUT WRITTEN CONSENT OF DIVERSIFIED WOODCRAFTS, INC. ANY REPRODUCTION IN PART OR WHOLE WITHOUT WRITTEN CONSENT IS SUBJECT TO LEGAL ACTION.

DIVERSIFIED WOODCRAFTS, INC
300 South Krueger Street
Suring, WI 54174
diversifiedwoodcrafts.com

TITLE:
3D PRINTER TABLE
TOOLS AND ASSEMBLY COMPONENTS

DRAWING NUMBER:	SCALE:	SHEET:	REVISION:
3DP-3624	NTS	2 OF 11	REV A

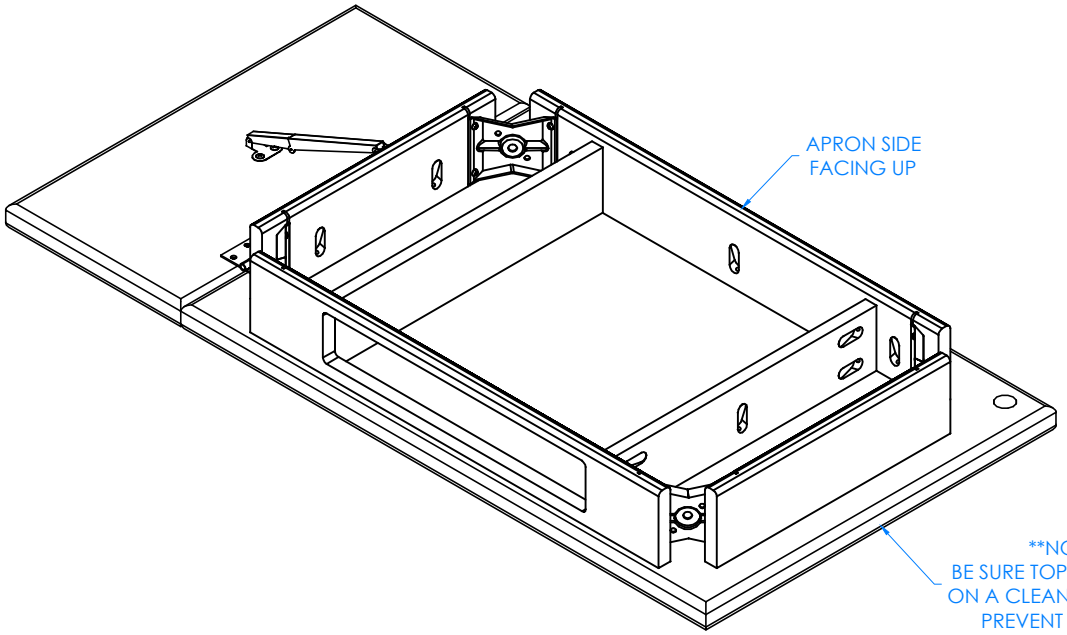

STEP 1:

- LAY TOP ASSEMBLY ON FLOOR WITH APRON SIDE FACING UP.

NOTE:

1.

REV.	DESCRIPTION	DATE	NAME	ECN NO.
A	CREATED DRAWING	10/26/17	EMK	-
REVISION LEVEL				

ALL DIMENSIONS ARE IN INCHES UNLESS NOTED OTHERWISE

CABINET SQUARENESS = ± .0625
FRACTIONAL VALUES = ± 1/32"
- ALL VALUES ± OVERALL -

DWN BY:	EMK	DATE DWN:	10/26/17
APR BY:		DATE APR:	
APR BY:		DATE APR:	

CONFIDENTIAL:
ALL DESIGN RIGHTS RESERVED
THE INFORMATION, DATA, DESIGN, AND DRAWINGS EMBODIED IN THIS DOCUMENT AND ALL REPRODUCTIONS THEREOF ARE THE EXCLUSIVE PROPERTY OF DIVERSIFIED WOODCRAFTS, INC.

THESE DOCUMENTS ARE SUPPLIED WITH THE UNDERSTANDING THAT THEY WILL NOT BE DISCLOSED TO THIRD PARTIES WITHOUT WRITTEN CONSENT OF DIVERSIFIED WOODCRAFTS, INC. ANY REPRODUCTION IN PART OR WHOLE WITHOUT WRITTEN CONSENT IS SUBJECT TO LEGAL ACTION.

DIVERSIFIED WOODCRAFTS, INC
300 South Krueger Street
Suring, WI 54174
diversifiedwoodcrafts.com

TITLE:
3D PRINTER TABLE
ASSEMBLY INSTRUCTIONS

DRAWING NUMBER:	SCALE:	SHEET:	REVISION:
3DP-3624	NTS	3 OF 11	REV A

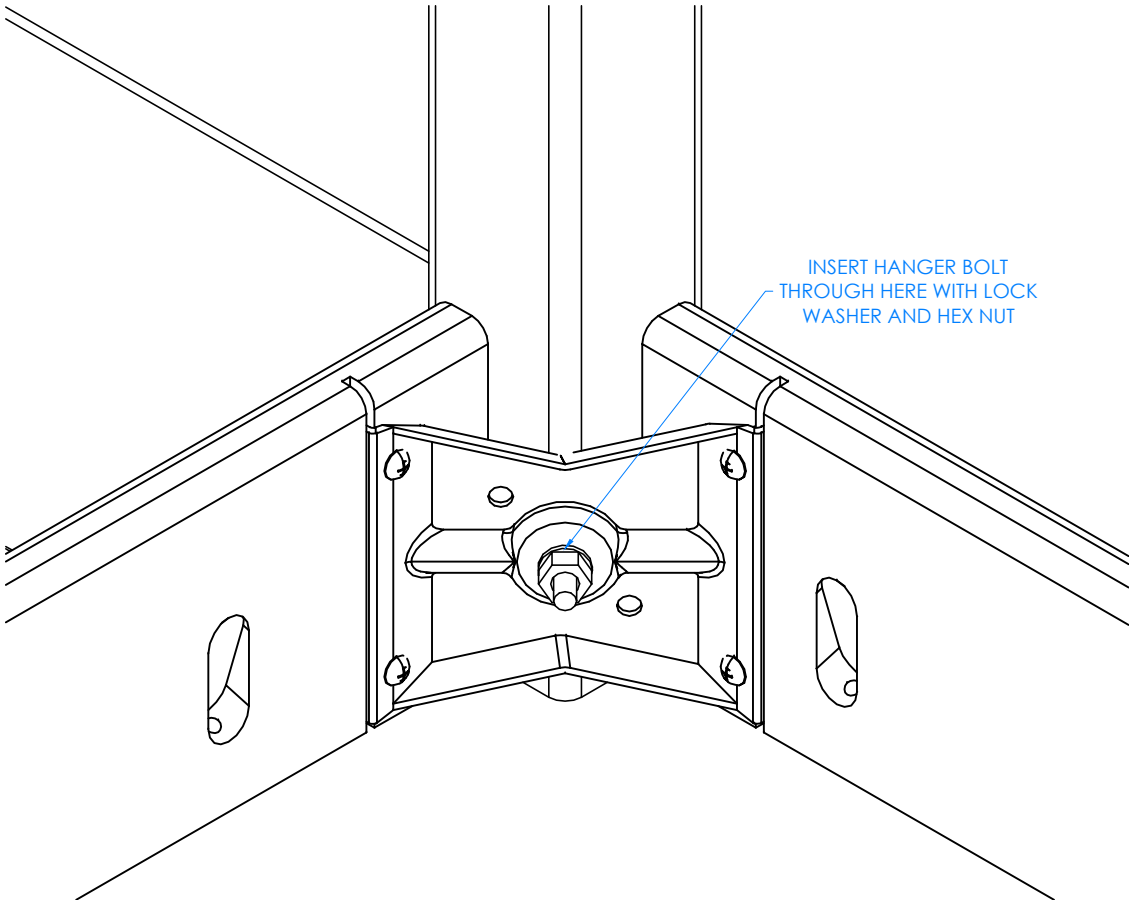

CLOSE UP OF CORNER LEG ASSEMBLY
(INTERNALS REMOVED TO SHOW CLARITY)

STEP 2:

- INSERT HANGER BOLT ON ONE LEG THROUGH THE CORNER BRACKET AND INSERT LOCK WASHER AND HEX NUT.
- SCREW ON NUT USING A ½" WRENCH OR ½" SOCKET AND TORQUE WRENCH.
- DO NOT TIGHTEN ALL THE WAY.
- REPEAT ON OTHER LEGS.

NOTE:

1.

REV.	DESCRIPTION	DATE	NAME	ECN NO.
A	CREATED DRAWING	10/26/17	EMK	-
REVISION LEVEL				

ALL DIMENSIONS ARE IN INCHES UNLESS NOTED OTHERWISE

CABINET SQUARENESS = ± .0625
FRACTIONAL VALUES = ± 1/32"
- ALL VALUES ± OVERALL -

DWN BY:	EMK	DATE DWN:	10/26/17
APR BY:		DATE APR:	
APR BY:		DATE APR:	

CONFIDENTIAL:
ALL DESIGN RIGHTS RESERVED
THE INFORMATION, DATA, DESIGN, AND DRAWINGS EMBODIED IN THIS DOCUMENT AND ALL REPRODUCTIONS THEREOF ARE THE EXCLUSIVE PROPERTY OF DIVERSIFIED WOODCRAFTS, INC.

THESE DOCUMENTS ARE SUPPLIED WITH THE UNDERSTANDING THAT THEY WILL NOT BE DISCLOSED TO THIRD PARTIES WITHOUT WRITTEN CONSENT OF DIVERSIFIED WOODCRAFTS, INC. ANY REPRODUCTION IN PART OR WHOLE WITHOUT WRITTEN CONSENT IS SUBJECT TO LEGAL ACTION.

DIVERSIFIED WOODCRAFTS, INC
300 South Krueger Street
Suring, WI 54174
diversifiedwoodcrafts.com

TITLE:
3D PRINTER TABLE
ASSEMBLY INSTRUCTIONS

DRAWING NUMBER:	SCALE:	SHEET:	REVISION:
3DP-3624	NTS	4 OF 11	REV A

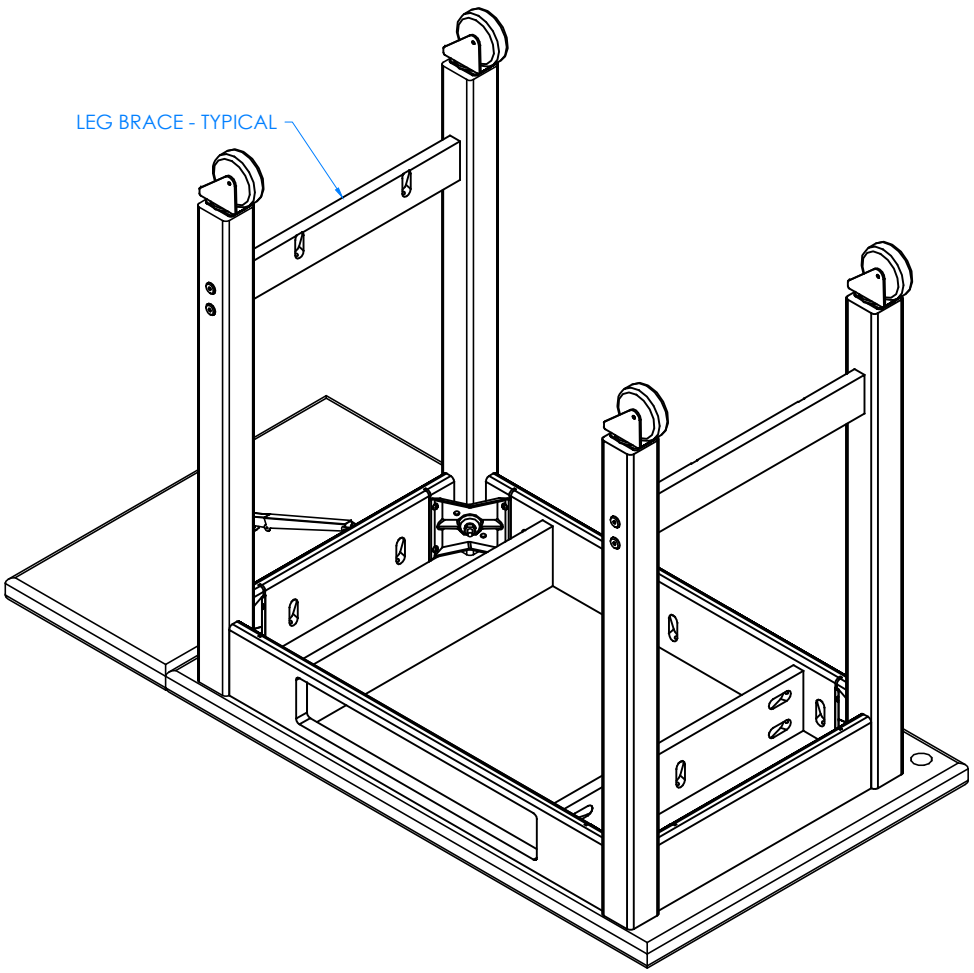

STEP 3:

- INSERT THE CONFIRMATS INTO ONE LEG AND SCREW INTO BRACE USING A 4MM ALLEN WRENCH.
- REPEAT ON ALL LEGS.
- MAKE SURE BRACES ARE STRAIGHT AND ALL CONFIRMATS ARE TIGHT.
- GO BACK TO STEP 2 AND TIGHTEN UP THE HANGER BOLT FOR EACH LEG USING A ½" WRENCH OR ½" SOCKET AND TORQUE WRENCH, TO A MINIMUM OF 12FT LBS BUT NOT TO EXCEED 17FT LBS.

NOTE:

1.

REV.	DESCRIPTION	DATE	NAME	ECN NO.
A	CREATED DRAWING	10/26/17	EMK	-
REVISION LEVEL				

ALL DIMENSIONS ARE IN INCHES UNLESS NOTED OTHERWISE

CABINET SQUARENESS = ± .0625
FRACTIONAL VALUES = ± 1/32"
- ALL VALUES ± OVERALL -

DWN BY:	EMK	DATE DWN:	10/26/17
APR BY:		DATE APR:	
APR BY:		DATE APR:	

CONFIDENTIAL:
ALL DESIGN RIGHTS RESERVED
THE INFORMATION, DATA, DESIGN, AND DRAWINGS EMBODIED IN THIS DOCUMENT AND ALL REPRODUCTIONS THEREOF ARE THE EXCLUSIVE PROPERTY OF DIVERSIFIED WOODCRAFTS, INC.

THESE DOCUMENTS ARE SUPPLIED WITH THE UNDERSTANDING THAT THEY WILL NOT BE DISCLOSED TO THIRD PARTIES WITHOUT WRITTEN CONSENT OF DIVERSIFIED WOODCRAFTS, INC. ANY REPRODUCTION IN PART OR WHOLE WITHOUT WRITTEN CONSENT IS SUBJECT TO LEGAL ACTION.

DIVERSIFIED WOODCRAFTS, INC
300 South Krueger Street
Suring, WI 54174
diversifiedwoodcrafts.com

TITLE:
3D PRINTER TABLE
ASSEMBLY INSTRUCTIONS

DRAWING NUMBER:	SCALE:	SHEET:	REVISION:
3DP-3624	NTS	5 OF 11	REV A

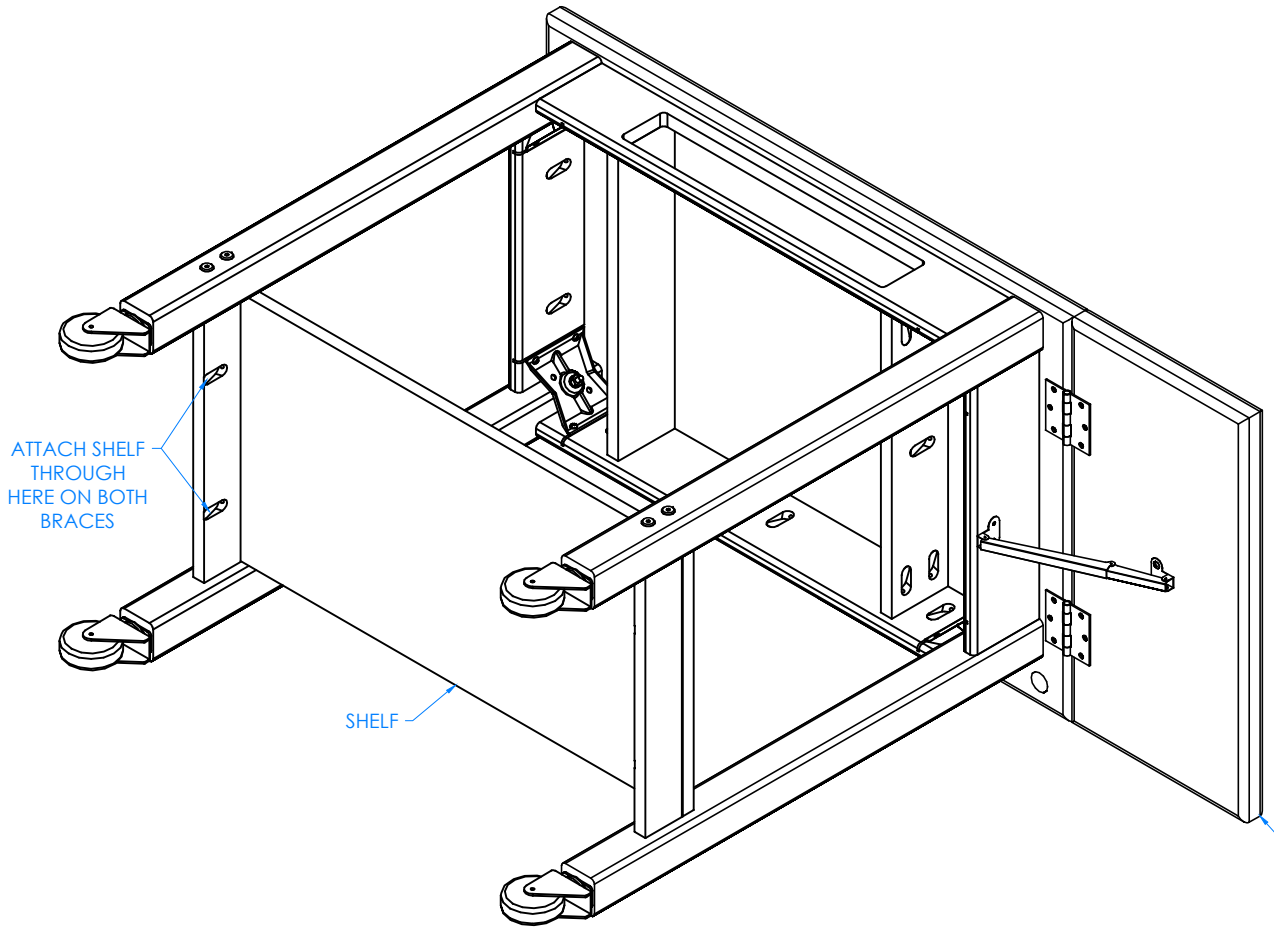

STEP 4:

- WITH HELP FROM ANOTHER PERSON, TIP TABLE ON ITS SIDE.
- ATTACH SHELF TO BRACES WITH THE HARDWARE PROVIDED.

NOTE:

1.

REV.	DESCRIPTION	DATE	NAME	ECN NO.
A	CREATED DRAWING	10/26/17	EMK	-
REVISION LEVEL				

ALL DIMENSIONS ARE IN INCHES UNLESS NOTED OTHERWISE

CABINET SQUARENESS = ± .0625
FRACTIONAL VALUES = ± 1/32"
- ALL VALUES ± OVERALL -

DWN BY:	EMK	DATE DWN:	10/26/17
APR BY:		DATE APR:	
APR BY:		DATE APR:	

CONFIDENTIAL:
ALL DESIGN RIGHTS RESERVED
THE INFORMATION, DATA, DESIGN, AND DRAWINGS EMBODIED IN THIS DOCUMENT AND ALL REPRODUCTIONS THEREOF ARE THE EXCLUSIVE PROPERTY OF DIVERSIFIED WOODCRAFTS, INC.

THESE DOCUMENTS ARE SUPPLIED WITH THE UNDERSTANDING THAT THEY WILL NOT BE DISCLOSED TO THIRD PARTIES WITHOUT WRITTEN CONSENT OF DIVERSIFIED WOODCRAFTS, INC. ANY REPRODUCTION IN PART OR WHOLE WITHOUT WRITTEN CONSENT IS SUBJECT TO LEGAL ACTION.

DIVERSIFIED WOODCRAFTS, INC
300 South Krueger Street
Suring, WI 54174
diversifiedwoodcrafts.com

TITLE:
3D PRINTER TABLE
ASSEMBLY INSTRUCTIONS

DRAWING NUMBER:	SCALE:	SHEET:	REVISION:
3DP-3624	NTS	6 OF 11	REV A

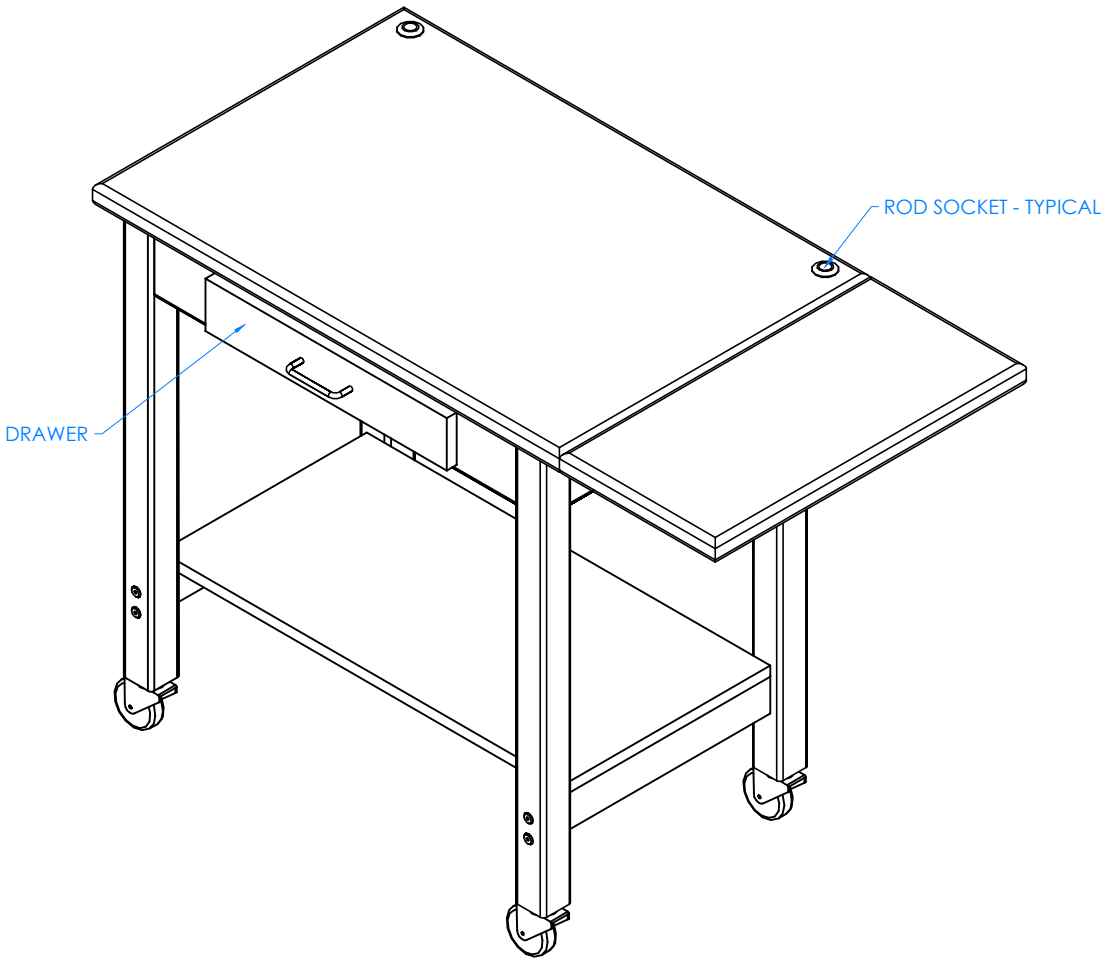

STEP 5:

- PLACE DRAWER INTO TABLE.
- INSERT ROD SOCKETS INTO PRE-DRILLED HOLES ON TOP.

NOTE:

1.

REV.	DESCRIPTION	DATE	NAME	ECN NO.
A	CREATED DRAWING	10/26/17	EMK	-

REVISION LEVEL

ALL DIMENSIONS ARE IN INCHES UNLESS NOTED OTHERWISE

CABINET SQUARENESS = ± .0625
FRACTIONAL VALUES = ± 1/32"
- ALL VALUES ± OVERALL -

DWN BY:	EMK	DATE DWN:	10/26/17
APR BY:		DATE APR:	
APR BY:		DATE APR:	

CONFIDENTIAL:
ALL DESIGN RIGHTS RESERVED
THE INFORMATION, DATA, DESIGN, AND DRAWINGS EMBODIED IN THIS DOCUMENT AND ALL REPRODUCTIONS THEREOF ARE THE EXCLUSIVE PROPERTY OF DIVERSIFIED WOODCRAFTS, INC.

THESE DOCUMENTS ARE SUPPLIED WITH THE UNDERSTANDING THAT THEY WILL NOT BE DISCLOSED TO THIRD PARTIES WITHOUT WRITTEN CONSENT OF DIVERSIFIED WOODCRAFTS, INC. ANY REPRODUCTION IN PART OR WHOLE WITHOUT WRITTEN CONSENT IS SUBJECT TO LEGAL ACTION.

DIVERSIFIED WOODCRAFTS, INC
300 South Krueger Street
Suring, WI 54174
diversifiedwoodcrafts.com

TITLE:
3D PRINTER TABLE
ASSEMBLY INSTRUCTIONS

DRAWING NUMBER:	SCALE:	SHEET:	REVISION:
3DP-3624	NTS	7 OF 11	REV A

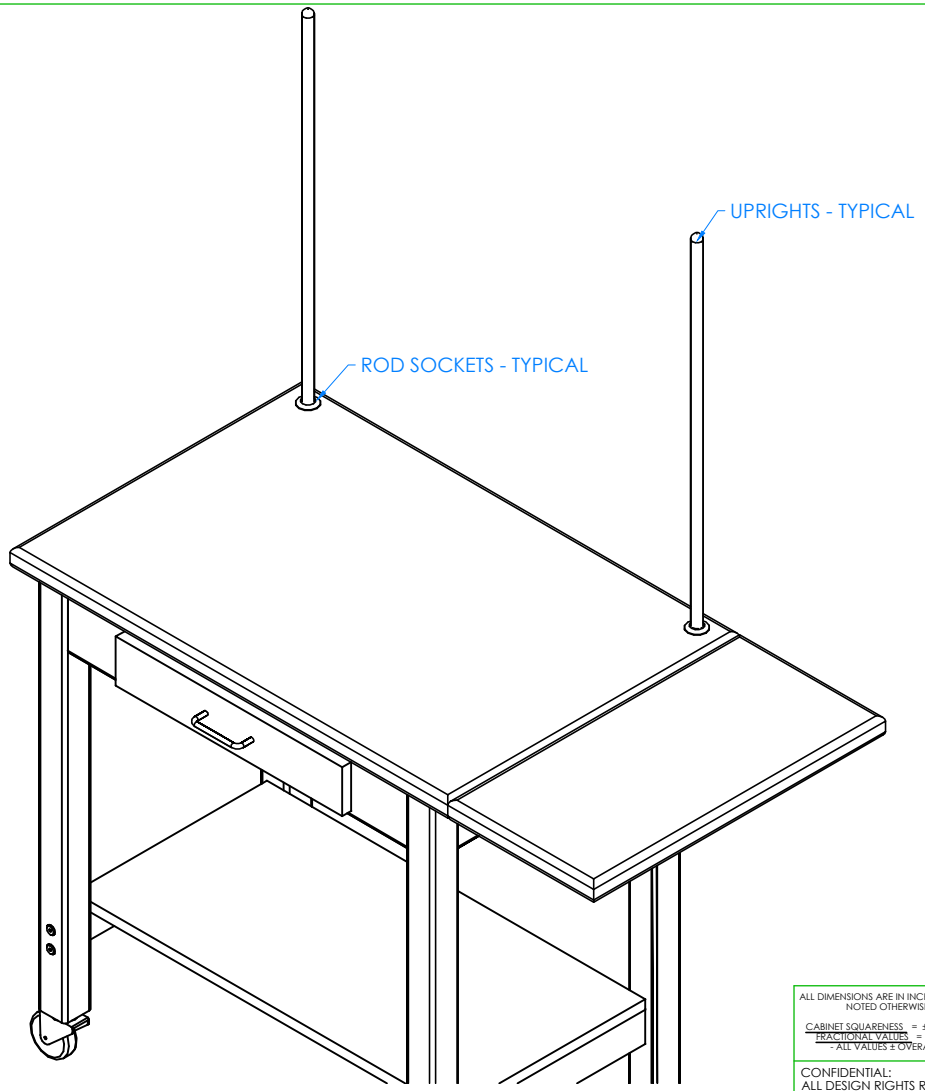

STEP 6:

- INSERT TAPERED END OF UPRIGHT INTO ROD SOCKETS ON THE TOP.

NOTE:

1.

REV.	DESCRIPTION	DATE	NAME	ECN NO.
A	CREATED DRAWING	10/26/17	EMK	-
REVISION LEVEL				

ALL DIMENSIONS ARE IN INCHES UNLESS NOTED OTHERWISE

CABINET SQUARENESS = ± .0625
FRACTIONAL VALUES = ± 1/32"
- ALL VALUES ± OVERALL -

DWN BY:	EMK	DATE DWN:	10/26/17
APR BY:		DATE APR:	
APR BY:		DATE APR:	

CONFIDENTIAL:
ALL DESIGN RIGHTS RESERVED
THE INFORMATION, DATA, DESIGN, AND DRAWINGS EMBODIED IN THIS DOCUMENT AND ALL REPRODUCTIONS THEREOF ARE THE EXCLUSIVE PROPERTY OF DIVERSIFIED WOODCRAFTS, INC.

THESE DOCUMENTS ARE SUPPLIED WITH THE UNDERSTANDING THAT THEY WILL NOT BE DISCLOSED TO THIRD PARTIES WITHOUT WRITTEN CONSENT OF DIVERSIFIED WOODCRAFTS, INC. ANY REPRODUCTION IN PART OR WHOLE WITHOUT WRITTEN CONSENT IS SUBJECT TO LEGAL ACTION.

DIVERSIFIED WOODCRAFTS, INC
300 South Krueger Street
Suring, WI 54174
diversifiedwoodcrafts.com

TITLE:
3D PRINTER TABLE
ASSEMBLY INSTRUCTIONS

DRAWING NUMBER:	SCALE:	SHEET:	REVISION:
3DP-3624	NTS	8 OF 11	REV A

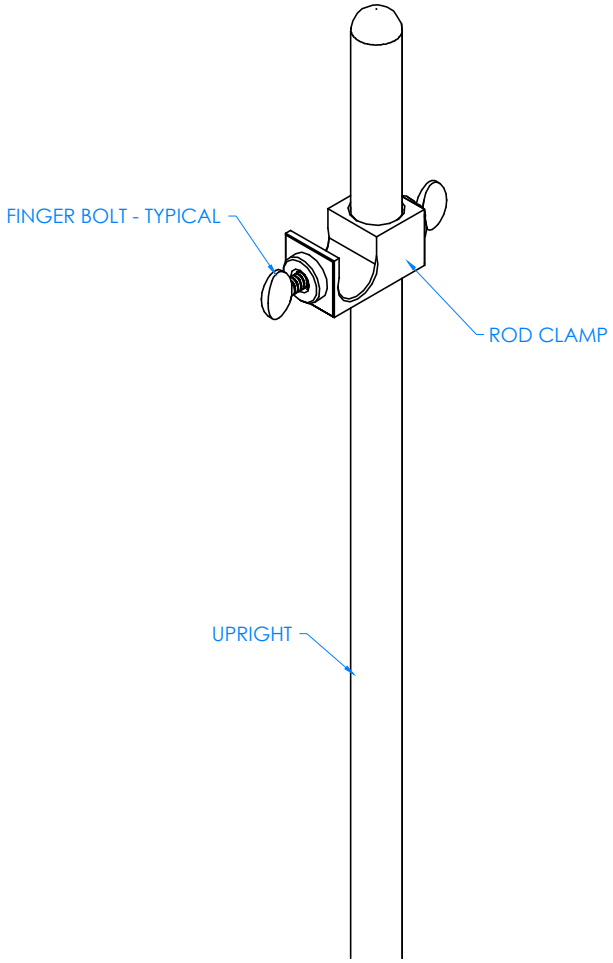

CLOSE UP OF UPRIGHT

STEP 7:

- SLIDE ROD CLAMP OVER UPRIGHT AND TIGHTEN IN DESIRED LOCATION USING THE FINGER BOLTS PROVIDED ON CLAMPS.
- REPEAT ON OTHER UPRIGHT.

NOTE:

1.

REV.	DESCRIPTION	DATE	NAME	ECN NO.
A	CREATED DRAWING	10/26/17	EMK	-

REVISION LEVEL

ALL DIMENSIONS ARE IN INCHES UNLESS NOTED OTHERWISE

CABINET SQUARENESS = ± .0625
FRACTIONAL VALUES = ± 1/32"
- ALL VALUES ± OVERALL -

DWN BY:	EMK	DATE DWN:	10/26/17
APR BY:		DATE APR:	
APR BY:		DATE APR:	

CONFIDENTIAL:
ALL DESIGN RIGHTS RESERVED
THE INFORMATION, DATA, DESIGN, AND DRAWINGS EMBODIED IN THIS DOCUMENT AND ALL REPRODUCTIONS THEREOF ARE THE EXCLUSIVE PROPERTY OF DIVERSIFIED WOODCRAFTS, INC.

THESE DOCUMENTS ARE SUPPLIED WITH THE UNDERSTANDING THAT THEY WILL NOT BE DISCLOSED TO THIRD PARTIES WITHOUT WRITTEN CONSENT OF DIVERSIFIED WOODCRAFTS, INC. ANY REPRODUCTION IN PART OR WHOLE WITHOUT WRITTEN CONSENT IS SUBJECT TO LEGAL ACTION.

DIVERSIFIED WOODCRAFTS, INC
300 South Krueger Street
Suring, WI 54174
diversifiedwoodcrafts.com

TITLE:
3D PRINTER TABLE
ASSEMBLY INSTRUCTIONS

DRAWING NUMBER:	SCALE:	SHEET:	REVISION:
3DP-3624	NTS	9 OF 11	REV A

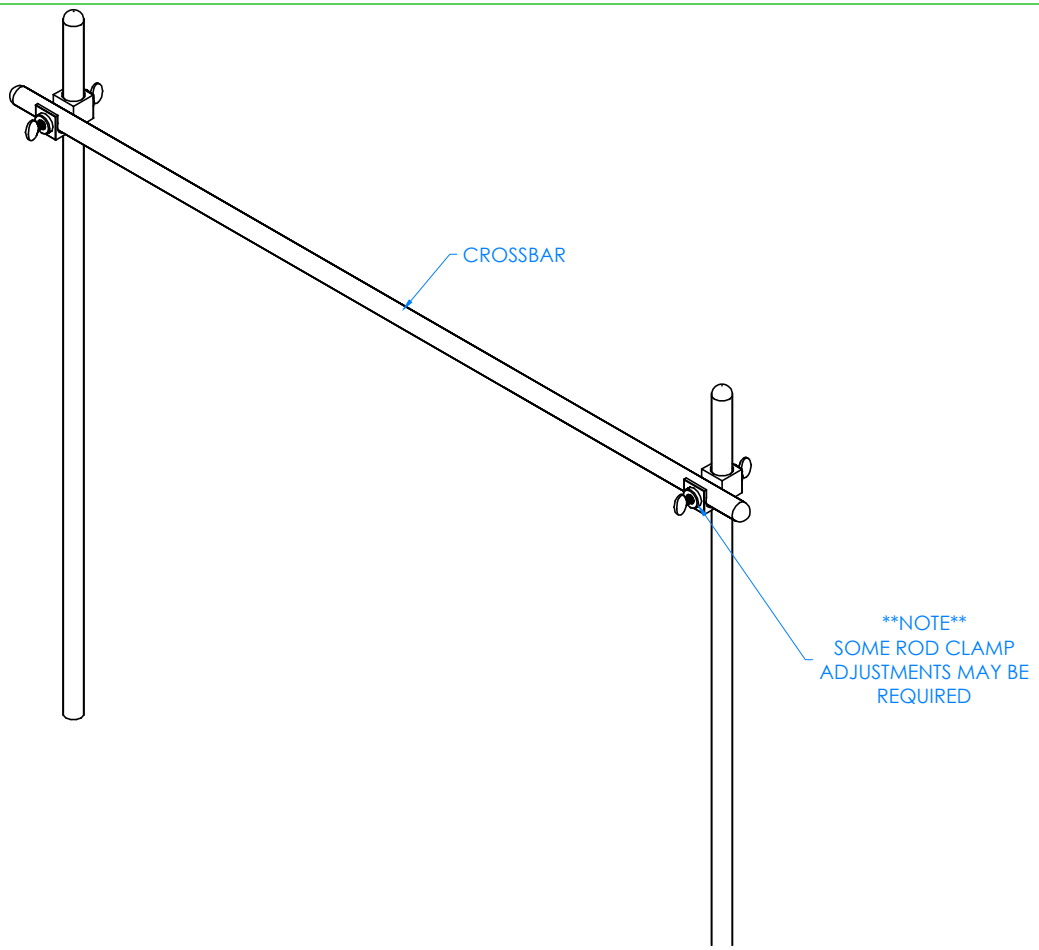

CLOSE UP OF UPRIGHT AND CROSSBAR ASSEMBLY

STEP 8:

- PLACE CROSSBAR ON GROOVES LOCATED ON CLAMPS.

NOTE:

1.

REV.	DESCRIPTION	DATE	NAME	ECN NO.
A	CREATED DRAWING	10/26/17	EMK	-

REVISION LEVEL

ALL DIMENSIONS ARE IN INCHES UNLESS NOTED OTHERWISE

CABINET SQUARENESS = ± .0625
FRACTIONAL VALUES = ± 1/32"
- ALL VALUES ± OVERALL -

DWN BY:	EMK	DATE DWN:	10/26/17
APR BY:		DATE APR:	
APR BY:		DATE APR:	

CONFIDENTIAL:
ALL DESIGN RIGHTS RESERVED
THE INFORMATION, DATA, DESIGN, AND DRAWINGS EMBODIED IN THIS DOCUMENT AND ALL REPRODUCTIONS THEREOF ARE THE EXCLUSIVE PROPERTY OF DIVERSIFIED WOODCRAFTS, INC.

THESE DOCUMENTS ARE SUPPLIED WITH THE UNDERSTANDING THAT THEY WILL NOT BE DISCLOSED TO THIRD PARTIES WITHOUT WRITTEN CONSENT OF DIVERSIFIED WOODCRAFTS, INC. ANY REPRODUCTION IN PART OR WHOLE WITHOUT WRITTEN CONSENT IS SUBJECT TO LEGAL ACTION.

DIVERSIFIED WOODCRAFTS, INC
300 South Krueger Street
Suring, WI 54174
diversifiedwoodcrafts.com

TITLE:
3D PRINTER TABLE
ASSEMBLY INSTRUCTIONS

DRAWING NUMBER:	SCALE:	SHEET:	REVISION:
3DP-3624	NTS	10 OF 11	REV A

ASSEMBLY TEMPLATE

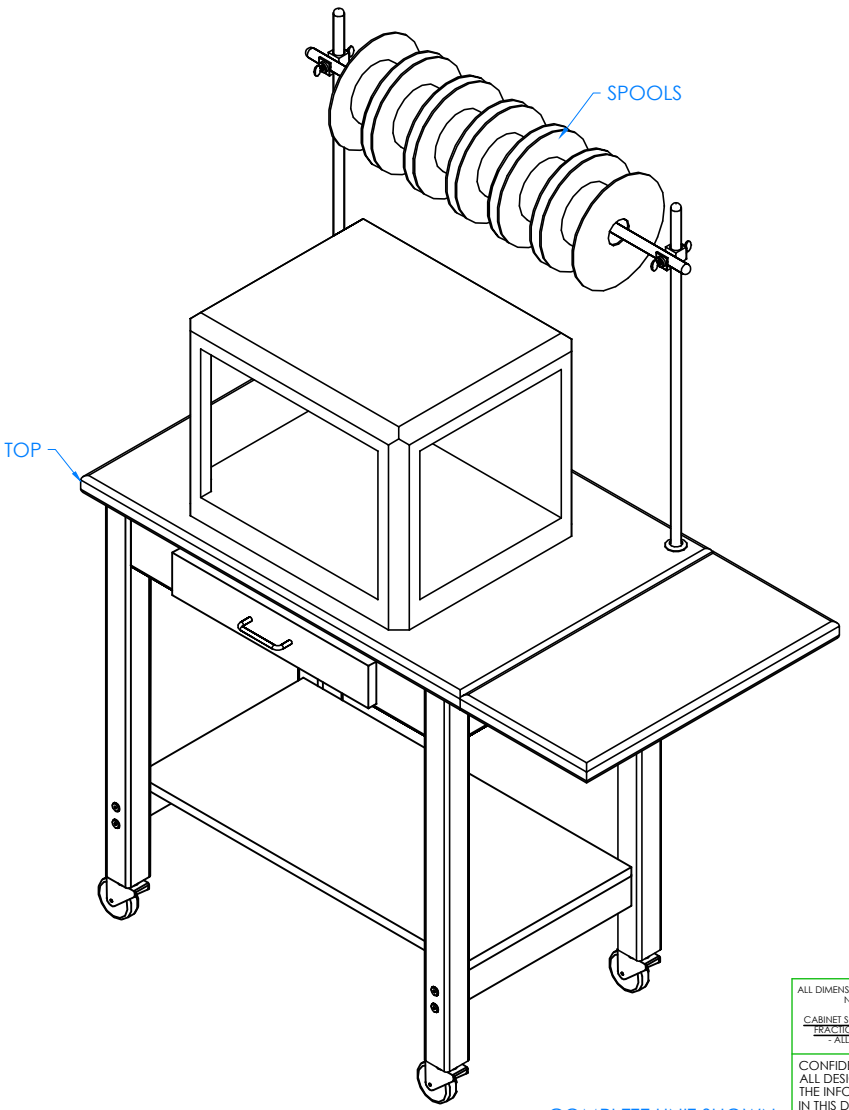

COMPLETE UNIT SHOWN

STEP 9:

- SET TABLE IN DESIRED LOCATION.
- PLACE 3D PRINTER ON TOP.
- SLIDE SPOOLS ON CROSS BAR BY REMOVING CROSSBAR AND ADDING SPOOLS AS DESIRED.

NOTE:

1.

REV.	DESCRIPTION	DATE	NAME	ECN NO.
A	CREATED DRAWING	10/26/17	EMK	-
REVISION LEVEL				

ALL DIMENSIONS ARE IN INCHES UNLESS NOTED OTHERWISE

CABINET SQUARENESS = ± .0625
FRACTIONAL VALUES = ± 1/32"
- ALL VALUES ± OVERALL -

DWN BY:	EMK	DATE DWN:	10/26/17
APR BY:		DATE APR:	
APR BY:		DATE APR:	

CONFIDENTIAL:
ALL DESIGN RIGHTS RESERVED
THE INFORMATION, DATA, DESIGN, AND DRAWINGS EMBODIED IN THIS DOCUMENT AND ALL REPRODUCTIONS THEREOF ARE THE EXCLUSIVE PROPERTY OF DIVERSIFIED WOODCRAFTS, INC.

THESE DOCUMENTS ARE SUPPLIED WITH THE UNDERSTANDING THAT THEY WILL NOT BE DISCLOSED TO THIRD PARTIES WITHOUT WRITTEN CONSENT OF DIVERSIFIED WOODCRAFTS, INC. ANY REPRODUCTION IN PART OR WHOLE WITHOUT WRITTEN CONSENT IS SUBJECT TO LEGAL ACTION.

DIVERSIFIED WOODCRAFTS, INC
300 South Krueger Street
Suring, WI 54174
diversifiedwoodcrafts.com

TITLE:
3D PRINTER TABLE
ASSEMBLY INSTRUCTIONS

DRAWING NUMBER:	SCALE:	SHEET:	REVISION:
3DP-3624	NTS	11 OF 11	REV A