ASSEMBLY TEMPLATE

PERIMETER WORKSTATION

2810K, 2810KF, 2820K, 2820KF, 2830K, 2830KF, 2840K, & 2840KF SERIES

ASSEMBLY INSTRUCTIONS

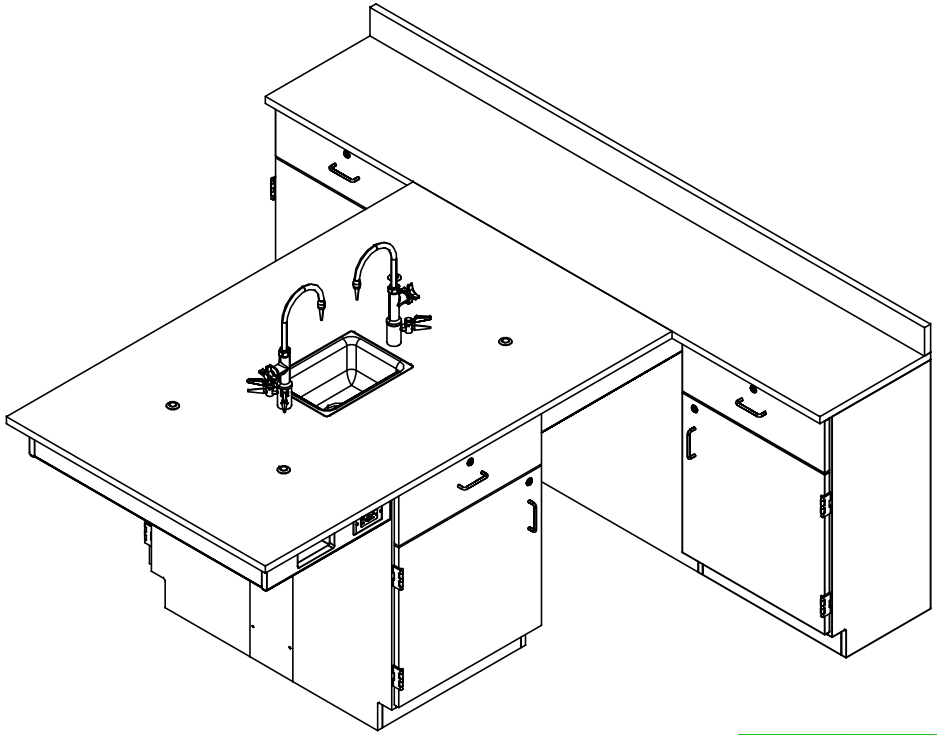

NOTE:

1. MODEL VIEWS MAY NOT REPRESENT EXACT MODEL PURCHASED

DWN BY:	EMK	DWN DATE:	12/1/16
APR BY:		DATE APR:	
APR BY:		DATE APR:	

UNLESS OTHERWISE SPECIFIED DIMENSION ARE IN INCHES

CABINET SQUARENESS ± .0625
FRACTIONAL VALUES ± 1/32"
- ALL VALUES ± OVERALL -

PERIMETER WORKSTATION
ASSEMBLY INSTRUCTIONS

REV.	DESCRIPTION	DATE	NAME	ECN NO.
A	CREATED DRAWING	12/1/16	EMK	-

REVISION LEVEL

THIS DRAWING IS THE SOLE PROPERTY OF DIVERSIFIED WOOD CRAFTS. IT MAY NOT BE ALTERED OR CHANGED WITHOUT PERMISSION

DRAWING NUMBER:	SCALE:	SHEET:	REVISION:
PERIMETER WORKSTATION	NTS	1 OF 10	REV A

ASSEMBLY TEMPLATE

TOOLS REQUIRED

CONTACT CEMENT
SCREW DRIVER
C-CLAMPS
SHIM STOCK (IF NEEDED)

ASSEMBLY COMPONENTS

ITEMS INCLUDED	PART #	PART DESCRIPTION	QTY
TOP A	VARIES	TOP,(STYLE VARIES),1.00X42X66,BLK, (EITHER FIXTURE OR FLAT)	1
TOP B	VARIES	TOP,(STYLE VARIES),1.00X18X90,BLK	1
TOP C	VARIES	TOP,(STYLE VARIES),1.00X4.00X90,BLK	1
CABINETS	N/A	CABINET (STYLE VARIES) 24"W X 35"H X 16"D	4
REMOVABLE PANEL	N/A	0.75"THK X 42"W X 5"H	1
REMOVABLE PANEL	N/A	0.75"THK X 42"W X 30"H	1
REMOVABLE PANEL	N/A	0.75"THK X 24.25"W X 12"L	2
REMOVABLE PANEL	N/A	0.75"THK X 7"W X 35"H	2
SCREWS - REMOVABLE PANELS	100495	SCREW,#10X1-½ PHIL TR. SMS,ZN	30
APRON ASSEMBLY	251142	APRON ASSEMBLY (FACTORY ASSEMBLED)	1
L BRACKET	100355	BRACKET,RAIL 1.25X1.25X4.25	6
SCREWS - L BRACKET	100649	SCREW,#8X ¾ PHIL TRUSS HEAD SMS	24
SILICONE	100711	SILICONE,SEALANT,CLEAR	2
RUBBER BASE MOLDING	100283	RUBBER BASE MOLDING (SOLD BY FOOT)	20
STAINLESS STEEL CORNERS	100057	CORNERS-STAINLESS STEEL,BASE	6
SCREWS - BASE	100064	SCREW,#6X½ PTH SMS SS SCREW	24
SHELF CLIPS	100027	SHELF CLIPS,PLASTIC	VARIES

NOTE:

1. TOPS ARE EITHER PHENOLIC OR EPOXY.
2. **XX** INDICATES ITEMS USED ONLY FOR THE "K" SERIES.
3. COMPONENTS VARY WITH STYLE OF PERIMETER WORKSTATION PURCHASED.

DWN BY:	EMK	DWN DATE:	12/1/16
APR BY:		DATE APR:	
APR BY:		DATE APR:	

UNLESS OTHERWISE SPECIFIED DIMENSION ARE IN INCHES

CABINET SQUARENESS ± .0625
FRACTIONAL VALUES ± 1/32"
- ALL VALUES ± OVERALL -

PERIMETER WORKSTATION
TOOLS AND ASSEMBLY COMPONENTS

REV.	DESCRIPTION	DATE	NAME	ECN NO.
A	CREATED DRAWING	12/1/16	EMK	-

REVISION LEVEL

THIS DRAWING IS THE SOLE PROPERTY OF DIVERSIFIED WOOD CRAFTS. IT MAY NOT BE ALTERED OR CHANGED WITHOUT PERMISSION

DRAWING NUMBER:	SCALE:	SHEET:	REVISION:
PERIMETER WORKSTATION	NTS	2 OF 10	REV A

ASSEMBLY TEMPLATE

ASSEMBLY COMPONENTS

ITEMS INCLUDED	PART #	PART DESCRIPTION	QTY
ELECTRICAL BOX	100033	ELECTRICAL BOX 3.00X2X2.5 DEEP	2
ELECTRICAL OUTLET	100034	ELE,OUT,GFI,20A 125V,BLK	2
FIXTURE - FAUCETS	100074-BKR	FIXTURE,L65-WSA-DIV(MULTI-SERVICE)	2
FIXTURE - SINK	100691	SINK,EPOXY L3,BLK	1
FIXTURE - SINK TRAP	100056	SINK TRAP,PLASTIC ADJUSTABLE	1
FIXTURE - SINK STOPPER	100112	SINK STOPPER 1 ½, BLK	1
FIXTURE - STRAINER	100055	SINK,OUTLET/STRAINER EPOXY,BLK	1
ROD SOCKETS	206505	ROD SOCKET ASSY,SOCKET,WASHER,NUT	4

NOTE:

1. TOPS ARE EITHER PHENOLIC OR EPOXY.
2. **XX** INDICATES ITEMS USED ONLY FOR THE "K" SERIES.
3. COMPONENTS VARY WITH STYLE OF PERIMETER WORKSTATION PURCHASED.

REV.	DESCRIPTION	DATE	NAME	ECN NO.
A	CREATED DRAWING	12/1/16	EMK	-

REVISION LEVEL

DWN BY:	EMK	DWN DATE:	12/1/16
APR BY:		DATE APR:	
APR BY:		DATE APR:	

UNLESS OTHERWISE SPECIFIED DIMENSION ARE IN INCHES

CABINET SQUARENESS ± .0625
FRACTIONAL VALUES ± 1/32"
- ALL VALUES ± OVERALL -

THIS DRAWING IS THE SOLE PROPERTY OF DIVERSIFIED WOOD CRAFTS. IT MAY NOT BE ALTERED OR CHANGED WITHOUT PERMISSION

TITLE:
PERIMETER WORKSTATION
TOOLS AND ASSEMBLY COMPONENTS

DRAWING NUMBER:	SCALE:	SHEET:	REVISION:
PERIMETER WORKSTATION	NTS	3 OF 10	REV A

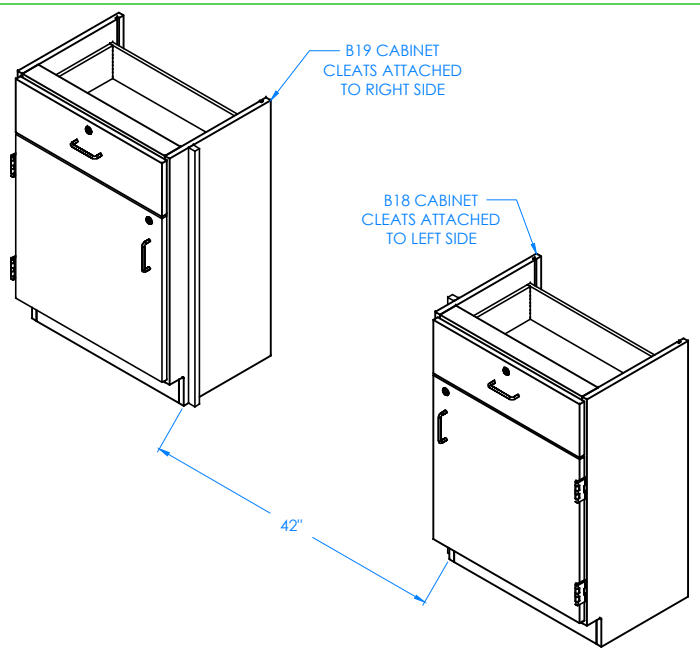

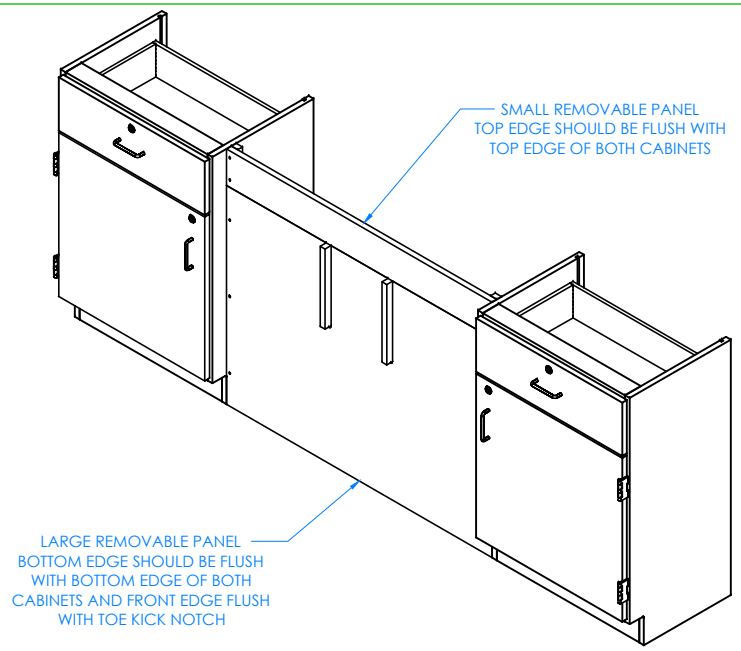

STEP 1:

PLACE THE TWO CABINETS (WITH THE CLEATS ATTACHED TO THE SIDES) AGAINST THE WALL. CLEATS SHOULD BE FACING EACH OTHER. LEAVE ENOUGH ROOM IN BETWEEN CABINETS FOR REMOVABLE PANELS. LEVEL CABINETS AND ATTACH TO FLOOR.

STEP 2:

ATTACH THE LARGE REMOVABLE PANEL TO THE CLEATS ON THE CABINETS FIRST. MAKING SURE BOTTOM EDGE OF PANEL IS FLUSH WITH BOTTOM EDGE OF CABINETS AND FRONT EDGE IS FLUSH WITH TOE KICK NOTCH. ATTACH SMALL REMOVABLE PANEL ABOVE LARGE PANEL SECOND. MAKING SURE PANEL IS FLUSH WITH TOP EDGES OF CABINETS. PRE-DRILL HOLES IN CLEATS TO PREVENT CRACKING .

NOTE:

1.

DWN BY:	EMK	DWN DATE:	12/1/16
APR BY:		DATE APR:	
APR BY:		DATE APR:	

UNLESS OTHERWISE SPECIFIED DIMENSION ARE IN INCHES

CABINET SQUARENESS ± .0625
FRACTIONAL VALUES ± 1/32"
- ALL VALUES ± OVERALL -

PERIMETER WORKSTATION
ASSEMBLY INSTRUCTIONS

REV.	DESCRIPTION	DATE	NAME	ECN NO.
A	CREATED DRAWING	12/1/16	EMK	-

REVISION LEVEL

THIS DRAWING IS THE SOLE PROPERTY OF DIVERSIFIED WOOD CRAFTS. IT MAY NOT BE ALTERED OR CHANGED WITHOUT PERMISSION

DRAWING NUMBER:	SCALE:	SHEET:	REVISION:
PERIMETER WORKSTATION	NTS	4 OF 10	REV A

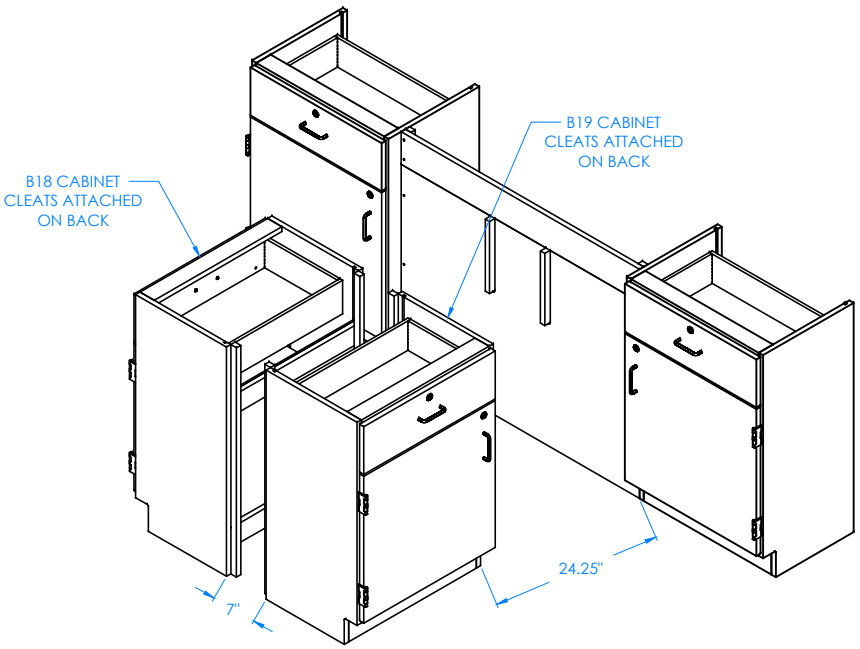

STEP 3:

PLACE THE OTHER TWO CABINETS (WITH CLEATS ATTACHED TO BACK) CENTERED IN FRONT OF CABINETS AGAINST WALL IN THE CORRECT LOCATION. LEAVE ENOUGH ROOM IN BETWEEN CABINETS FOR REMOVABLE PANELS. LEVEL CABINETS AND ANCHOR TO FLOOR.

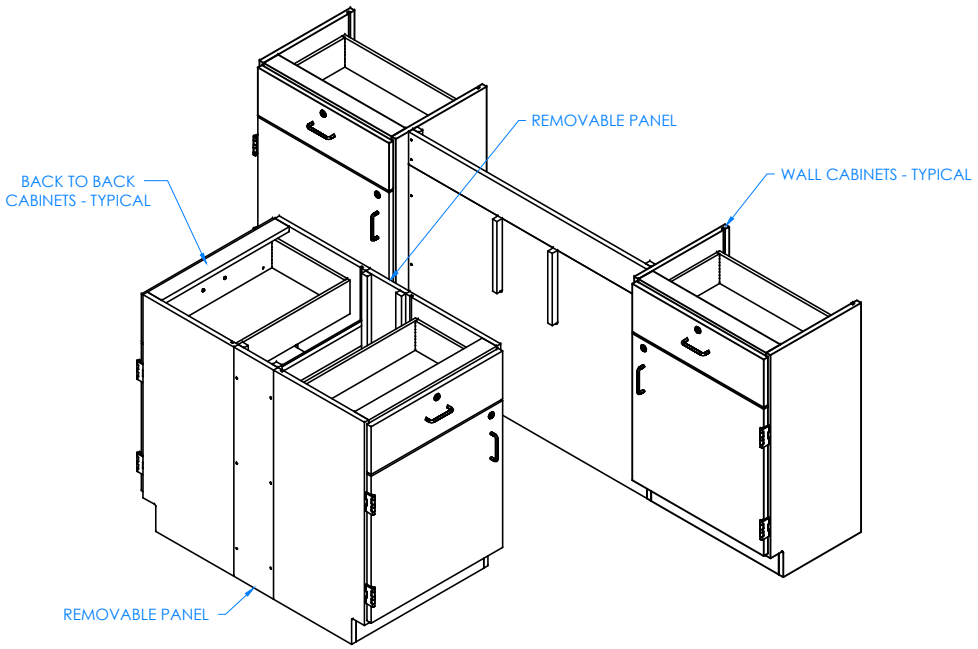

STEP 4:

ATTACH TWO SMALL REMOVABLE PANELS IN BETWEEN THE TWO BACK TO BACK CABINETS WITH THE SCREWS PROVIDED. PRE-DRILL HOLES IN CLEATS TO PREVENT CRACKING.

NOTE:

1.

A	CREATED DRAWING	12/1/16	EMK	-
REV.	DESCRIPTION	DATE	NAME	ECN NO.
REVISION LEVEL				

DWN BY:	EMK	DWN DATE:	12/1/16
APR BY:		DATE APR:	
APR BY:		DATE APR:	

UNLESS OTHERWISE SPECIFIED DIMENSION ARE IN INCHES

CABINET SQUARENESS ± .0625
FRACTIONAL VALUES ± 1/32"
- ALL VALUES ± OVERALL -

THIS DRAWING IS THE SOLE PROPERTY OF DIVERSIFIED WOOD CRAFTS. IT MAY NOT BE ALTERED OR CHANGED WITHOUT PERMISSION

PERIMETER WORKSTATION
ASSEMBLY INSTRUCTIONS

DRAWING NUMBER:	SCALE:	SHEET:	REVISION:
PERIMETER WORKSTATION	NTS	5 OF 10	REV A

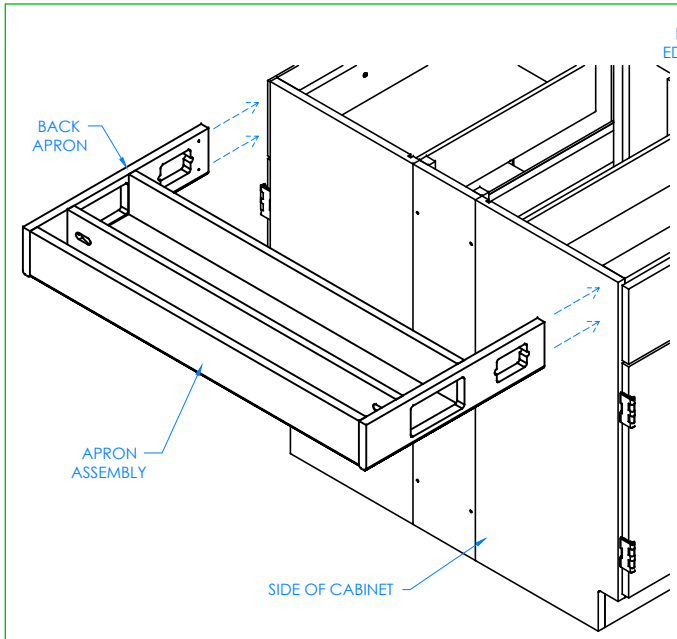

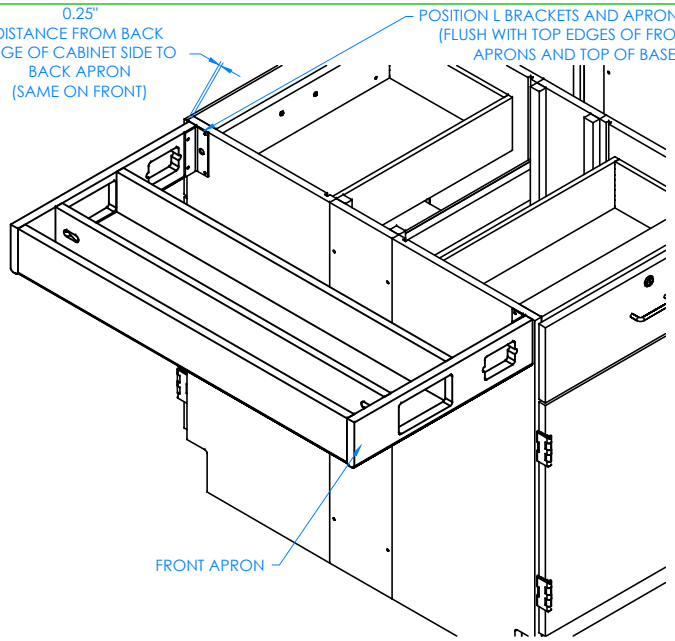

CLOSE UP OF APRON ASSEMBLY AND SIDE ON BACK TO BACK CABINETS SHOWN

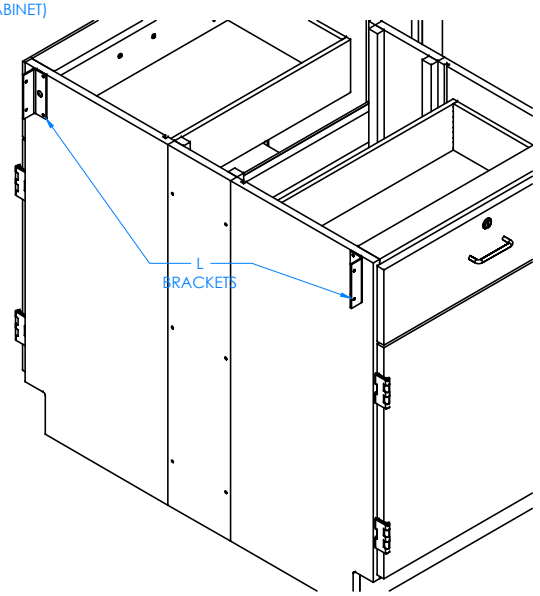

CLOSE UP OF SIDE ON BACK TO BACK CABINETS SHOWN

STEP 5:

WITH HELP FROM ANOTHER PERSON, POSITION APRON ASSEMBLY UP TO THE SIDE OF THE TWO BACK TO BACK CABINETS SO IT IS CENTERED CORRECTLY AND FLUSH WITH TOP OF BASE CABINETS. PLACE THE L BRACKETS IN CORRECT POSITION ON APRON ASSEMBLY AND SIDE OF CABINETS (SHOULD BE FLUSH WITH TOP EDGE OF CABINETS AND FRONT AND BACK OF APRONS). MARK ON THE SIDE OF THE CABINET WHERE THE L BRACKETS NEED TO BE ATTACHED. SET APRON ASSEMBLY AND L BRACKETS DOWN.

STEP 6:

ATTACH L BRACKETS TO SIDE OF CABINETS WITH SCREWS PROVIDED.

NOTE:

1.

A	CREATED DRAWING	12/1/16	EMK	-
REV.	DESCRIPTION	DATE	NAME	ECN NO.
REVISION LEVEL				

DWN BY:	EMK	DWN DATE:	12/1/16
APR BY:		DATE APR:	
APR BY:		DATE APR:	

UNLESS OTHERWISE SPECIFIED DIMENSION ARE IN INCHES

CABINET SQUARENESS ± .0625
FRACTIONAL VALUES ± 1/32"
- ALL VALUES ± OVERALL -

THIS DRAWING IS THE SOLE PROPERTY OF DIVERSIFIED WOOD CRAFTS. IT MAY NOT BE ALTERED OR CHANGED WITHOUT PERMISSION

PERIMETER WORKSTATION
ASSEMBLY INSTRUCTIONS

DRAWING NUMBER:	SCALE:	SHEET:	REVISION:
PERIMETER WORKSTATION	NTS	6 OF 10	REV A

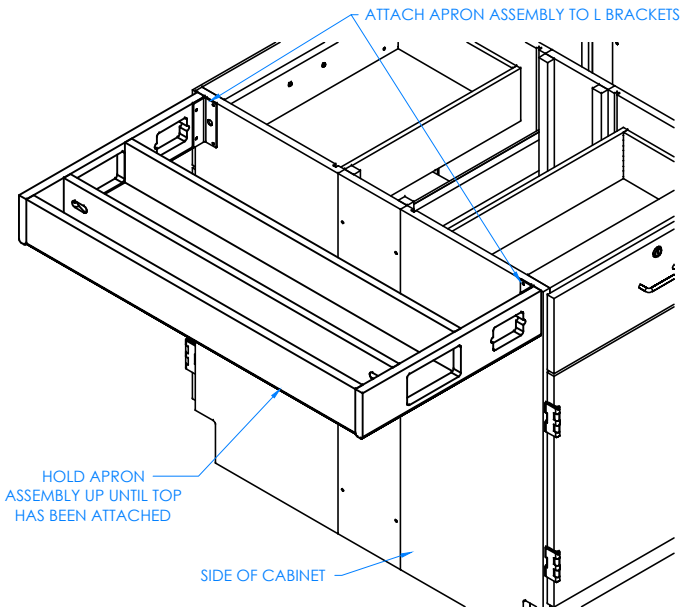

CLOSE UP OF APRON ASSEMBLY ATTACHED TO SIDE OF CABINETS SHOWN

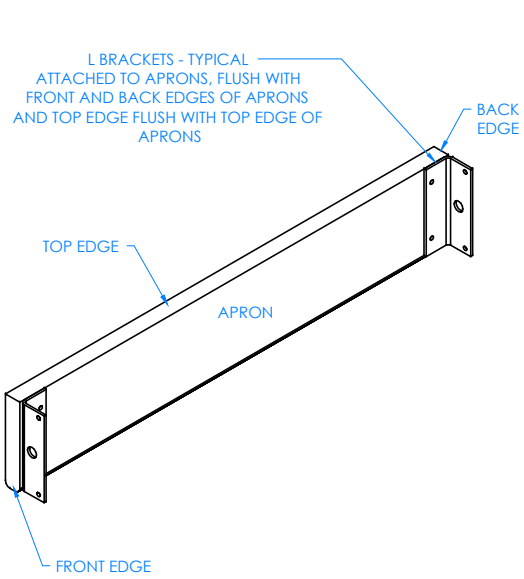

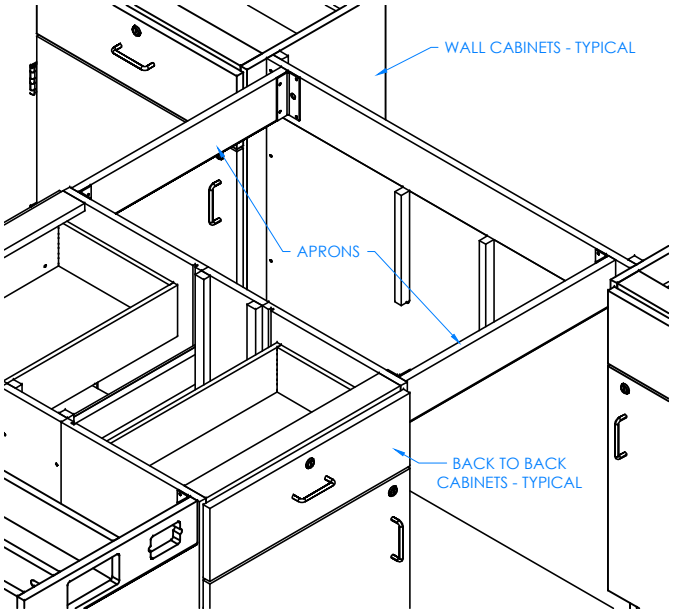

CLOSE UP OF APRONS ATTACHED IN BETWEEN BACK TO BACK CABINETS AND WALL CABINETS SHOWN

STEP 7:

WITH HELP FROM ANOTHER PERSON, PLACE APRON ASSEMBLY UP TO SIDE AND ATTACH TO L BRACKETS WITH SCREWS PROVIDED. SUPPORT THIS ASSEMBLY UNTIL TOP IS SECURED. IT IS NOT STRONG ENOUGH TO WITHSTAND WEIGHT UNTIL TOP IS ATTACHED.

STEP 8:

ATTACH REMAINING L BRACKETS TO THE TWO APRONS. MAKING SURE BRACKETS ARE FLUSH WITH FRONT AND BACK EDGES OF APRONS AND TOP EDGE OF BRACKET IS FLUSH WITH TOP EDGE OF APRONS.

STEP 9:

ATTACH THE TWO APRONS IN BETWEEN THE BACK TO BACK CABINETS AND THE WALL CABINETS IN DESIRED LOCATION WITH REMAINING SCREWS PROVIDED.

NOTE:

1.

A	CREATED DRAWING	12/1/16	EMK	-
REV.	DESCRIPTION	DATE	NAME	ECN NO.
REVISION LEVEL				

DWN BY:	EMK	DWN DATE:	12/1/16
APR BY:		DATE APR:	
APR BY:		DATE APR:	

UNLESS OTHERWISE SPECIFIED DIMENSION ARE IN INCHES

CABINET SQUARENESS ± .0625
FRACTIONAL VALUES ± 1/32"
- ALL VALUES ± OVERALL -

THIS DRAWING IS THE SOLE PROPERTY OF DIVERSIFIED WOOD CRAFTS. IT MAY NOT BE ALTERED OR CHANGED WITHOUT PERMISSION

PERIMETER WORKSTATION
ASSEMBLY INSTRUCTIONS

DRAWING NUMBER:	SCALE:	SHEET:	REVISION:
PERIMETER WORKSTATION	NTS	7 OF 10	REV A

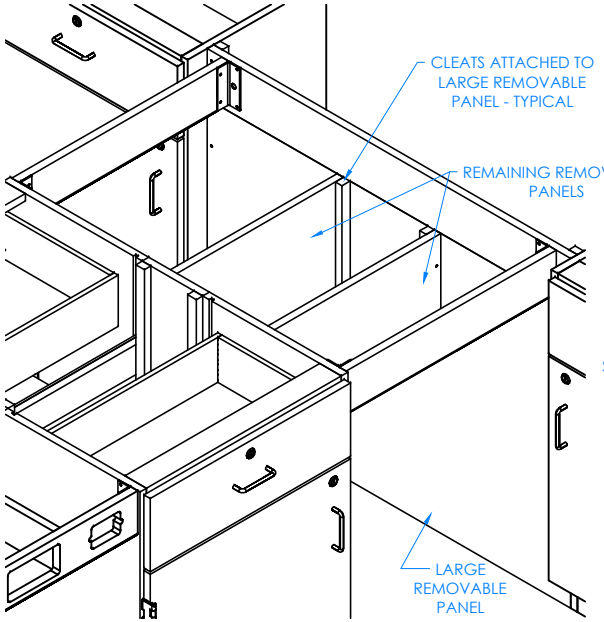

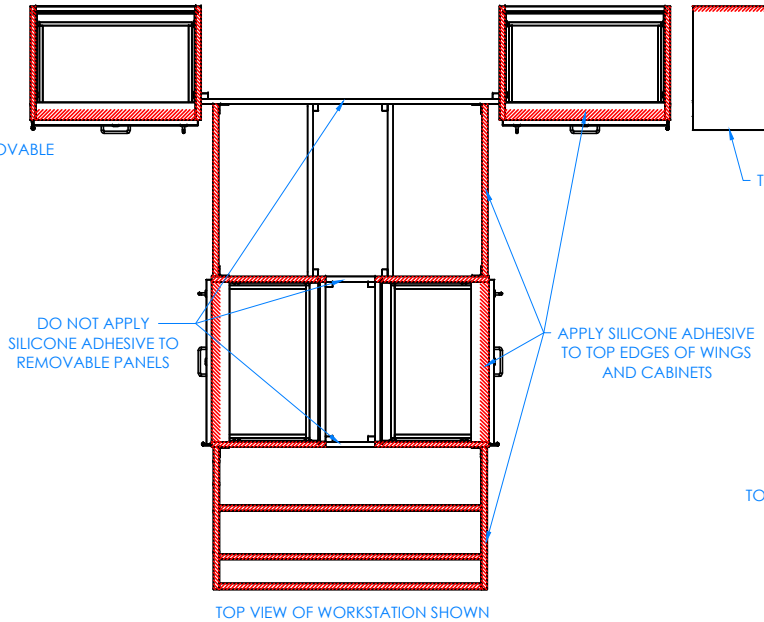

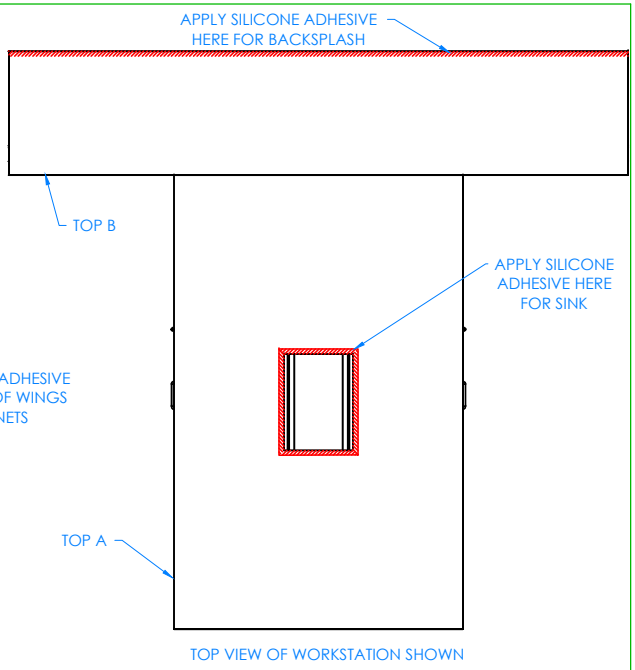

STEP 10:

PLACE THE TWO REMAINING REMOVABLE PANELS TO THE CLEATS ATTACHED ON THE LARGE REMOVABLE PANEL AND THE SIDES OF THE BACK TO BACK CABINETS (NOT SHOWN) AND ATTACH WITH REMAINING SCREWS PROVIDED. THESE PANELS CAN BE REMOVED TO ACCESS PLUMBING AND GAS AT ANY TIME. PRE-DRILL HOLES IN CLEATS TO PREVENT CRACKING .

STEP 11:

APPLY SILICONE ADHESIVE TO TOP EDGES OF CABINETS AND WINGS. PLACE TOPS ON UNIT WITH PROPER OVERHANG (CENTERED ON WORKSTATION). APPLY A BEAD OF ADHESIVE TO EDGES OF THE TOPS (WHERE THE TWO TOPS MEET) AND PRESS FIRMLY TO CONNECT TOPS TOGETHER. BE SURE TOP B IS TIGHT AGAINST WALL. WIPE OFF ANY EXCESS CAULK. CLAMP ON TOPS TO WINGS AND TOP RAILS OF CABINETS TO REMOVE ANY WARP USING SHIMS AND C-CLAMPS, IF NEEDED, WHEN ALIGNING THE TOP (DO THIS BEFORE ADHESIVE SETS UP). LET CURE FOR 6-12 HOURS. DO NOT APPLY SILICONE ADHESIVE TO REMOVABLE PANELS .

STEP 12:

IF YOU DO NOT HAVE A "K" SERIES UNIT, SKIP TO STEP 13. APPLY SILICONE ADHESIVE TO SINK OPENING ON TOP A. LOWER SINK INTO OPENING. APPLY SILICONE ADHESIVE TO CUT EDGE OF BACKSPLASH (TOP C) POSITION IT ON THE BACK EDGE OF TOP B ALONG THE WALL. MAKE SURE BACKSPLASH IS TIGHT AGAINST THE WALL AND ON CABINET TOP. WIPE OFF ANY EXCESS CAULK AND ALLOW TO SET. LET CURE FOR 6-12 HOURS.

NOTE:

1.

A	CREATED DRAWING	12/1/16	EMK	-
REV.	DESCRIPTION	DATE	NAME	ECN NO.
REVISION LEVEL				

DWN BY:	EMK	DWN DATE:	12/1/16
APR BY:		DATE APR:	
APR BY:		DATE APR:	

UNLESS OTHERWISE SPECIFIED DIMENSION ARE IN INCHES

CABINET SQUARENESS ± .0625
FRACTIONAL VALUES ± 1/32"
- ALL VALUES ± OVERALL -

THIS DRAWING IS THE SOLE PROPERTY OF DIVERSIFIED WOOD CRAFTS. IT MAY NOT BE ALTERED OR CHANGED WITHOUT PERMISSION

PERIMETER WORKSTATION
ASSEMBLY INSTRUCTIONS

DRAWING NUMBER:	SCALE:	SHEET:	REVISION:
PERIMETER WORKSTATION	NTS	8 OF 10	REV A

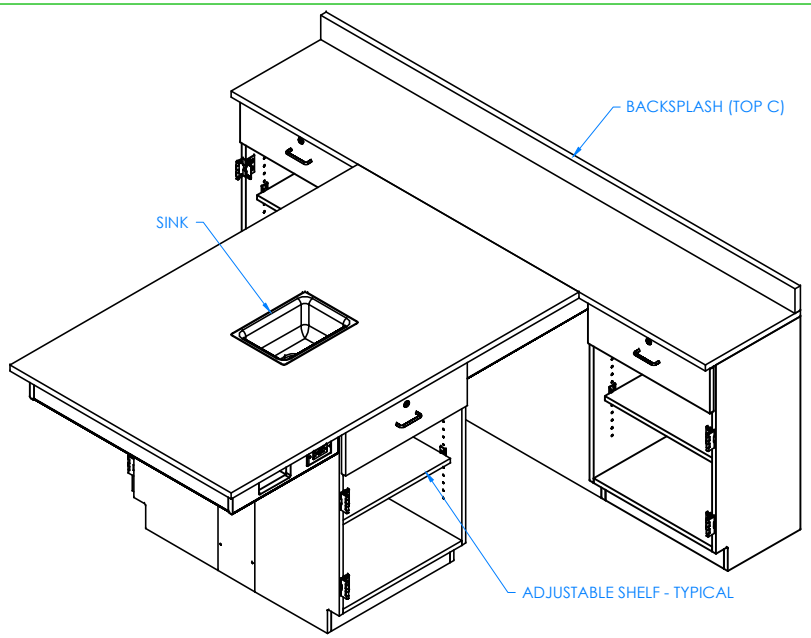

DOORS REMOVED TO SHOW CLARITY

STEP 13:

IF YOUR UNIT HAS ADJUSTABLE SHELVES, INSERT SHELF CLIPS IN DESIRED LOCATION. PLACE SHELVES ON CLIPS, MAKING SURE THEY ARE LEVEL.

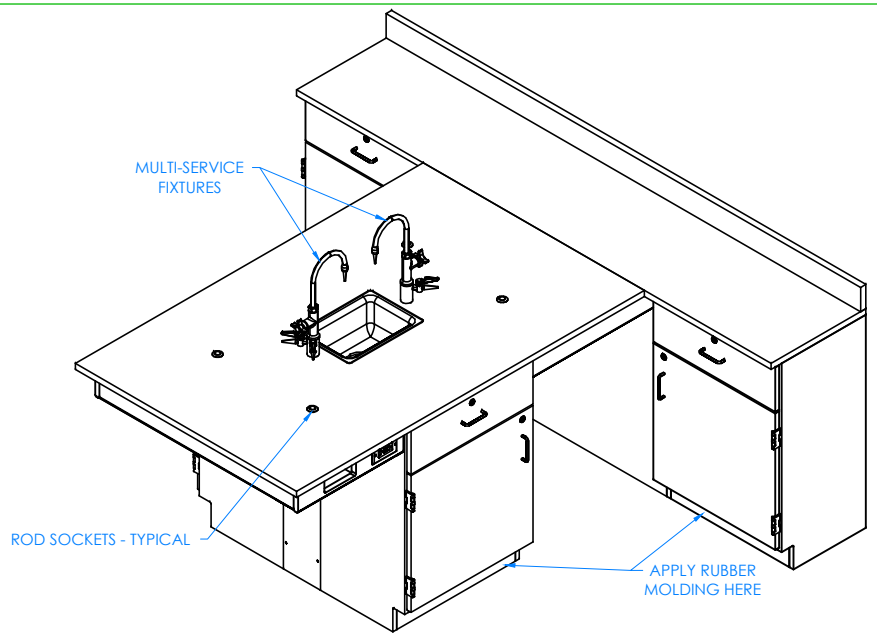

COMPLETE UNIT SHOWN

STEP 14:

ATTACH RUBBER MOLDING TO BASE OF CABINETS USING CONTACT CEMENT. AFTER MOLDING IS IN PLACE, SCREW STAINLESS STEEL CORNER BRACKETS ON EACH CORNER OVER BASE MOLDING WITH THE SCREWS PROVIDED. IF YOU HAVE A "K" SERIES UNIT, INSTALL MULT-SERVICE FIXTURES IN THE HOLES PROVIDED ON TOP. INSERT ROD SOCKETS INTO PRE-DRILLED HOLES IN TOP.

NOTE:

1. ALL WATER, ELECTRICAL, AND GAS CONNECTIONS SHOULD BE PERFORMED BY A TRAINED PROFESSIONAL PER LOCAL CODE.

DWN BY:	EMK	DWN DATE:	12/1/16	
APR BY:		DATE APR:		
APR BY:		DATE APR:		

UNLESS OTHERWISE SPECIFIED DIMENSION ARE IN INCHES

CABINET SQUARENESS ± .0625
FRACTIONAL VALUES ± 1/32"
- ALL VALUES ± OVERALL -

REV.	DESCRIPTION	DATE	NAME	ECN NO.
A	CREATED DRAWING	12/1/16	EMK	-

REVISION LEVEL

THIS DRAWING IS THE SOLE PROPERTY OF DIVERSIFIED WOOD CRAFTS. IT MAY NOT BE ALTERED OR CHANGED WITHOUT PERMISSION

PERIMETER WORKSTATION
ASSEMBLY INSTRUCTIONS

DRAWING NUMBER:	SCALE:	SHEET:	REVISION:
PERIMETER WORKSTATION	NTS	9 OF 10	REV A