ASSEMBLY TEMPLATE

STORAGE CABINET TABLES-DOUBLE

2300K, C2300K, 2400K, & C2400K SERIES

ASSEMBLY INSTRUCTIONS

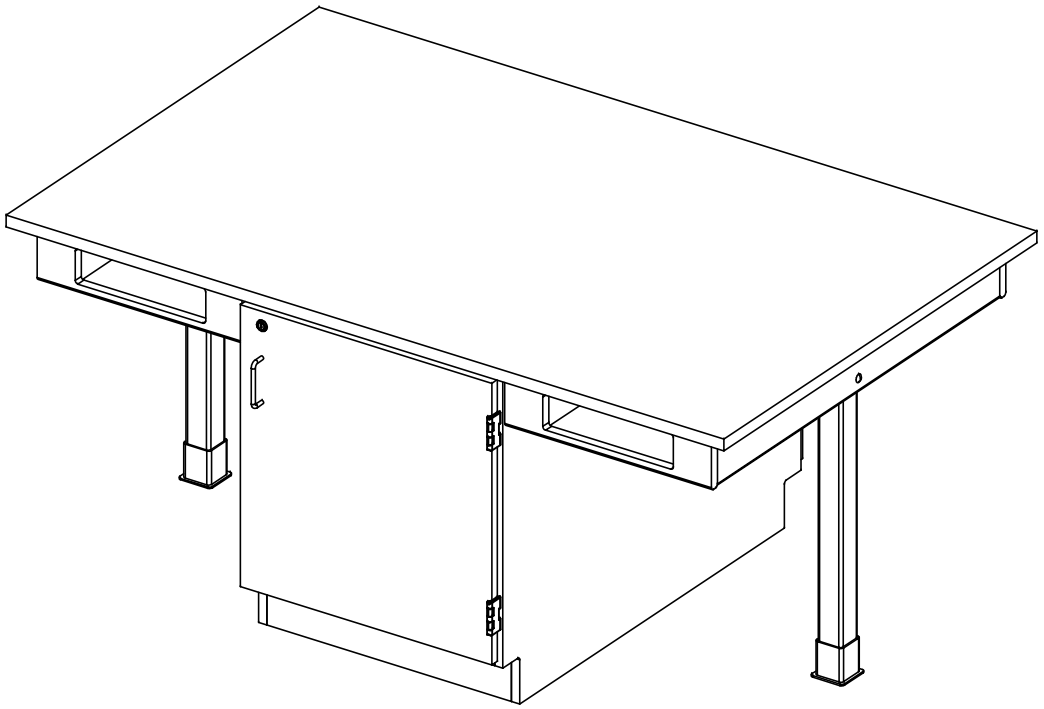

NOTE:

1. MODEL VIEWS MAY NOT REPRESENT EXACT MODEL PURCHASED

B	SEPERATED SINGLE UNITS FROM DOUBLE UNITS	10/26/16	EMK	-
A	CREATED DRAWING	3/15/16	EMK	-
REV.	DESCRIPTION	DATE	NAME	ECN NO.
REVISION LEVEL				

DWN BY:	EMK	DWN DATE:	3/15/16
APR BY:		DATE APR:	
APR BY:		DATE APR:	

UNLESS OTHERWISE SPECIFIED DIMENSION ARE IN INCHES

CABINET SQUARENESS ± .0625
FRACTIONAL VALUES ± 1/32"
- ALL VALUES ± OVERALL -

THIS DRAWING IS THE SOLE PROPERTY OF DIVERSIFIED WOOD CRAFTS. IT MAY NOT BE ALTERED OR CHANGED WITHOUT PERMISSION

STORAGE CABINET TABLES-DOUBLE
ASSEMBLY INSTRUCTIONS

DRAWING NUMBER:	SCALE:	SHEET:	REVISION:
STORAGE CABINET TABLES	NTS	1 OF 4	REV B

ASSEMBLY TEMPLATE

TOOLS REQUIRED

½" WRENCH
½" SOCKET AND TORQUE WRENCH - OPTIONAL
CONTACT CEMENT
SCREW DRIVER
C-CLAMPS
SHIM STOCK (IF NEEDED)

ASSEMBLY COMPONENTS

ITEMS INCLUDED	PART #	PART DESCRIPTION	QTY
CABINET ASSEMBLY	VARIES	CABINET STYLES VARY WITH CHOICE OF TABLE STYLE	1
TOP AND APRON ASSEMBLY	N/A	TOP ASSEMBLY (FACTORY ASSEMBLED)	2
LEGS	500100	LEG,OAK 2.25X2.25X28.25	2
LEG HARDWARE	206618	LEG HARDWARE ASSY, BOOT,LEV,T-NUT	2
RUBBER BASE MOLDING	100283	RUBBER BASE MOLDING(SOLD BY FOOT)	10
STAINLESS STEEL CORNERS	100057	CORNERS-STAINLESS STEEL,BASE	4
SCREWS - BASE	100064	SCREW,#6X½ PTH SMS SS SCREW	16
CARRIAGE BOLT	100447	BOLT,5/16X4-1/2 CARRIAGE	4
HEX NUT	100044	NUT,HEX 5/16-18 STEEL ZINC	4
WASHER	100451	WASHER,5/16 FLAT ZINC PLATED	4
SILICONE	100711	SILICONE FOR TOPS	1

NOTE:

1. *X* INDICATES ITEMS ONLY USED FOR THE UNITS WITH EPOXY OR PHENOLIC TOPS.
   1.1. EX: 2304K, C2304K, 2306K, C2306K, 2404K, C2404K, 2406K, & C2406K SERIES

REV.	DESCRIPTION	DATE	NAME	ECN NO.
B	SEPERATED SINGLE UNITS FROM DOUBLE UNITS	10/26/16	EMK	-
A	CREATED DRAWING	3/15/16	EMK	-

REVISION LEVEL

DWN BY:	EMK	DWN DATE:	3/15/16
APR BY:		DATE APR:	
APR BY:		DATE APR:	

UNLESS OTHERWISE SPECIFIED DIMENSION ARE IN INCHES

CABINET SQUARENESS ± .0625
FRACTIONAL VALUES ± 1/32"
- ALL VALUES ± OVERALL -

THIS DRAWING IS THE SOLE PROPERTY OF DIVERSIFIED WOOD CRAFTS. IT MAY NOT BE ALTERED OR CHANGED WITHOUT PERMISSION

STORAGE CABINET TABLES-DOUBLE
TOOLS AND ASSEMBLY COMPONENTS

DRAWING NUMBER:	SCALE:	SHEET:	REVISION:
STORAGE CABINET TABLES	NTS	2 OF 4	REV B

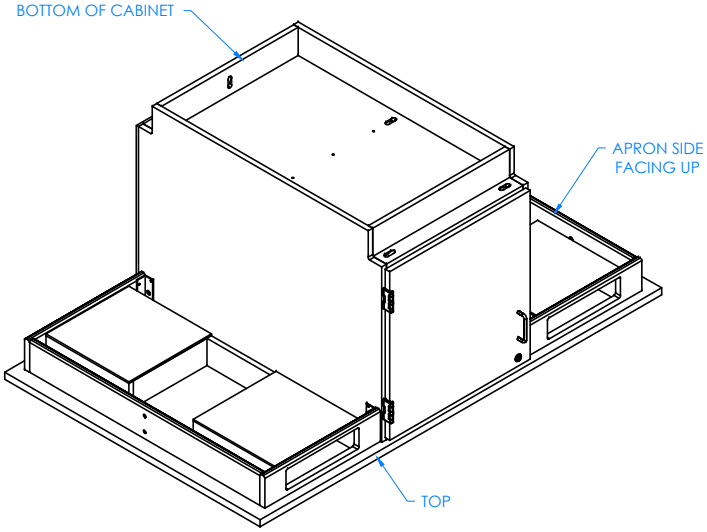

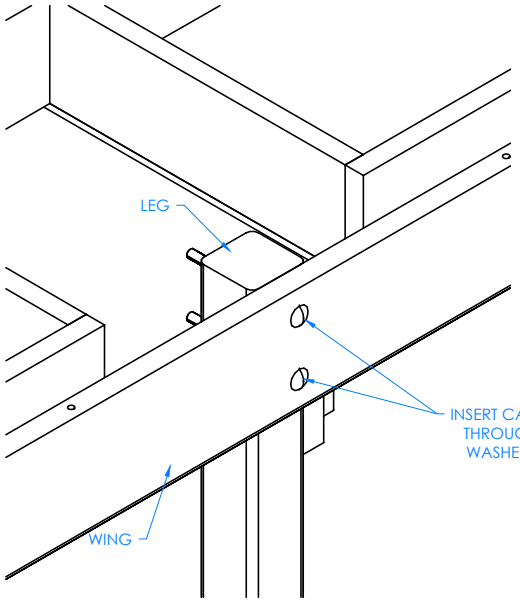

OUTSIDE OF CENTER LEG ASSEMBLY SHOWN
(TOP REMOVED TO SHOW CLARITY)

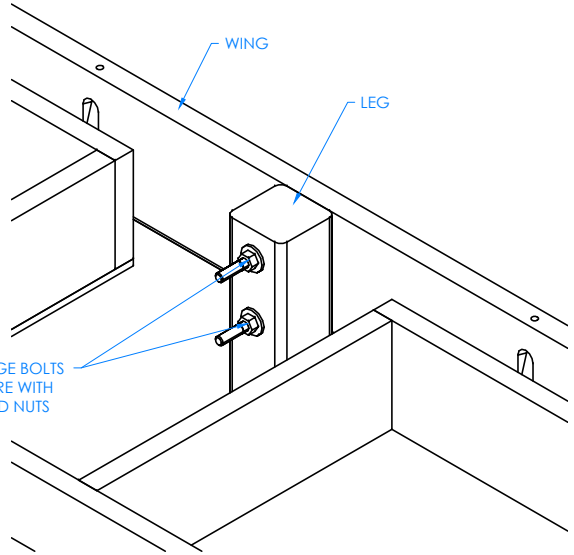

INSIDE OF CENTER LEG ASSEMBLY SHOWN
(TOP REMOVED TO SHOW CLARITY)

STEP 1:

LAY THE TABLE ON THE FLOOR, WITH APRON SIDE AND BOTTOM OF CABINET FACING UP. BE SURE TOP ASSEMBLY IS ON A CLEAN SURFACE TO PREVENT DAMAGE. YOU WILL NEED TWO OR THREE OTHER PEOPLE TO HELP WITH THIS STEP, AS TOP ASSEMBLY WILL BE HEAVY.

STEP 2:

LINE UP HOLES IN THE WING WITH HOLES IN THE LEG AND INSERT THE CARRIAGE BOLTS, WASHER, AND NUT. TIGHTEN NUT USING ½" WRENCH OR ½" SOCKET AND TORQUE WRENCH, TO A MINIMUM OF 12FT LBS BUT NOT TO EXCEED 17FT LBS . LEG SHOULD BE PERPENDICULAR TO THE WING. REPEAT FOR OTHER LEG.

NOTE:

1.

REV.	DESCRIPTION	DATE	NAME	ECN NO.
B	SEPERATED SINGLE UNITS FROM DOUBLE UNITS	10/26/16	EMK	-
A	CREATED DRAWING	3/15/16	EMK	-

REVISION LEVEL

DWN BY:	EMK	DWN DATE:	3/15/16
APR BY:		DATE APR:	
APR BY:		DATE APR:	

UNLESS OTHERWISE SPECIFIED DIMENSION ARE IN INCHES

CABINET SQUARENESS ± .0625
FRACTIONAL VALUES ± 1/32"
- ALL VALUES ± OVERALL -

THIS DRAWING IS THE SOLE PROPERTY OF DIVERSIFIED WOOD CRAFTS. IT MAY NOT BE ALTERED OR CHANGED WITHOUT PERMISSION

STORAGE CABINET TABLES-DOUBLE
ASSEMBLY INSTRUCTIONS

DRAWING NUMBER:	SCALE:	SHEET:	REVISION:
STORAGE CABINET TABLES	NTS	3 OF 4	REV B

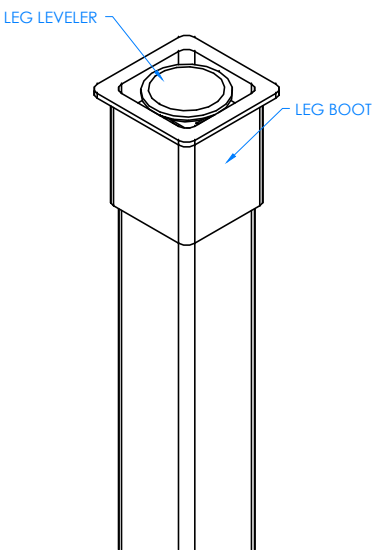

CLOSE UP OF LEG LEVELER AND LEG BOOT ASSEMBLY

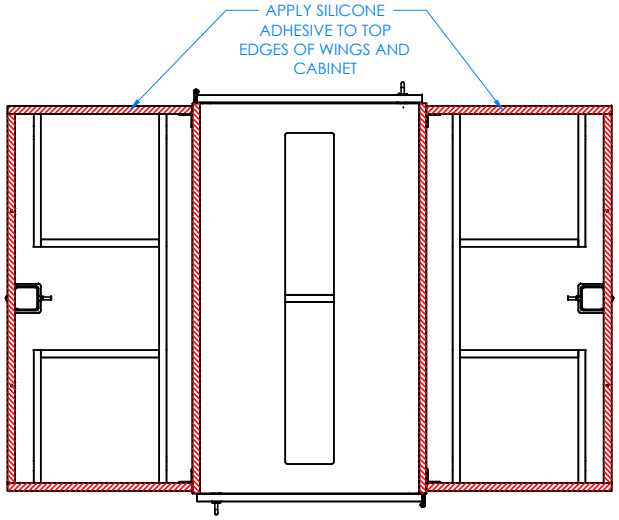

TOP VIEW OF TABLE SHOWN

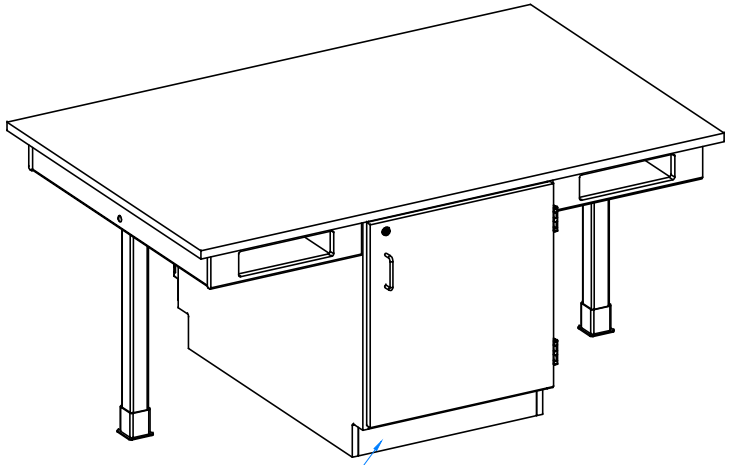

COMPLETE UNIT SHOWN

STEP 3:

SLIDE LEG BOOTS ONTO LEGS WITH FLARED END TOWARD THE BOTTOM OF LEG. SCREW LEG LEVELERS INTO T-NUT ON BOTTOM OF THE LEG.

STEP 4:

TURN UNIT OVER ONTO LEGS. SET TABLE IN PLACE AND ADJUST LEG LEVELERS TO LEVEL THE TABLE. IF YOU DON'T HAVE A PHENOLIC OR EPOXY TOP, SKIP TO STEP 5. APPLY SILICONE ADHESIVE TO TOP EDGES OF THE CABINET AND WINGS. PLACE TOP ON UNIT WITH PROPER OVERHANG (2" ON SIDES AND 1 $\frac{1}{4}$" ON FRONT AND BACK). CLAMP THE TOP TO THE WINGS AND TOP RAILS OF CABINET TO REMOVE ANY WARP USING SHIMS AND C-CLAMPS, IF NEEDED, WHEN ALIGNING TOP (DO THIS BEFORE ADHESIVE ON EDGES SETS UP). LET CURE FOR 6-12 HOURS.

STEP 5:

ATTACH RUBBER MOLDING TO BASE OF CABINET USING CONTACT CEMENT. AFTER MOLDING IS IN PLACE, SCREW STAINLESS STEEL CORNER BRACKETS ON EACH CORNER OVER BASE MOLDING WITH THE SCREWS PROVIDED.

NOTE:

1.

REV.	DESCRIPTION	DATE	NAME	ECN NO.
B	SEPERATED SINGLE UNITS FROM DOUBLE UNITS	10/26/16	EMK	-
A	CREATED DRAWING	3/15/16	EMK	-

REVISION LEVEL

DWN BY:	EMK	DWN DATE:	3/15/16
APR BY:		DATE APR:	
APR BY:		DATE APR:	

UNLESS OTHERWISE SPECIFIED DIMENSION ARE IN INCHES

CABINET SQUARENESS ± .0625
FRACTIONAL VALUES ± 1/32"
- ALL VALUES ± OVERALL -

THIS DRAWING IS THE SOLE PROPERTY OF DIVERSIFIED WOOD CRAFTS. IT MAY NOT BE ALTERED OR CHANGED WITHOUT PERMISSION

STORAGE CABINET TABLES-DOUBLE ASSEMBLY INSTRUCTIONS

DRAWING NUMBER:	SCALE:	SHEET:	REVISION:
STORAGE CABINET TABLES	NTS	4 OF 4	REV B