4975 – COURIER BOX

BASE BOLT PATTERN

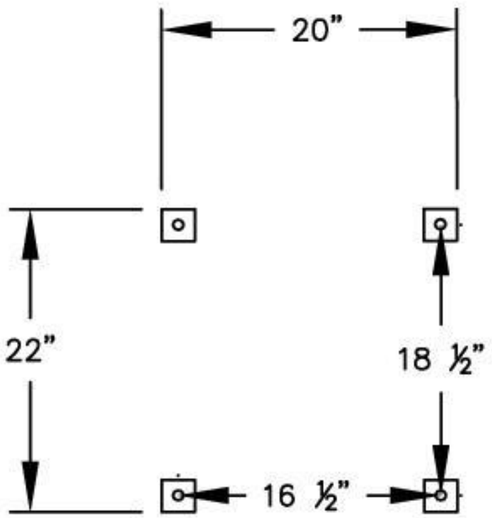

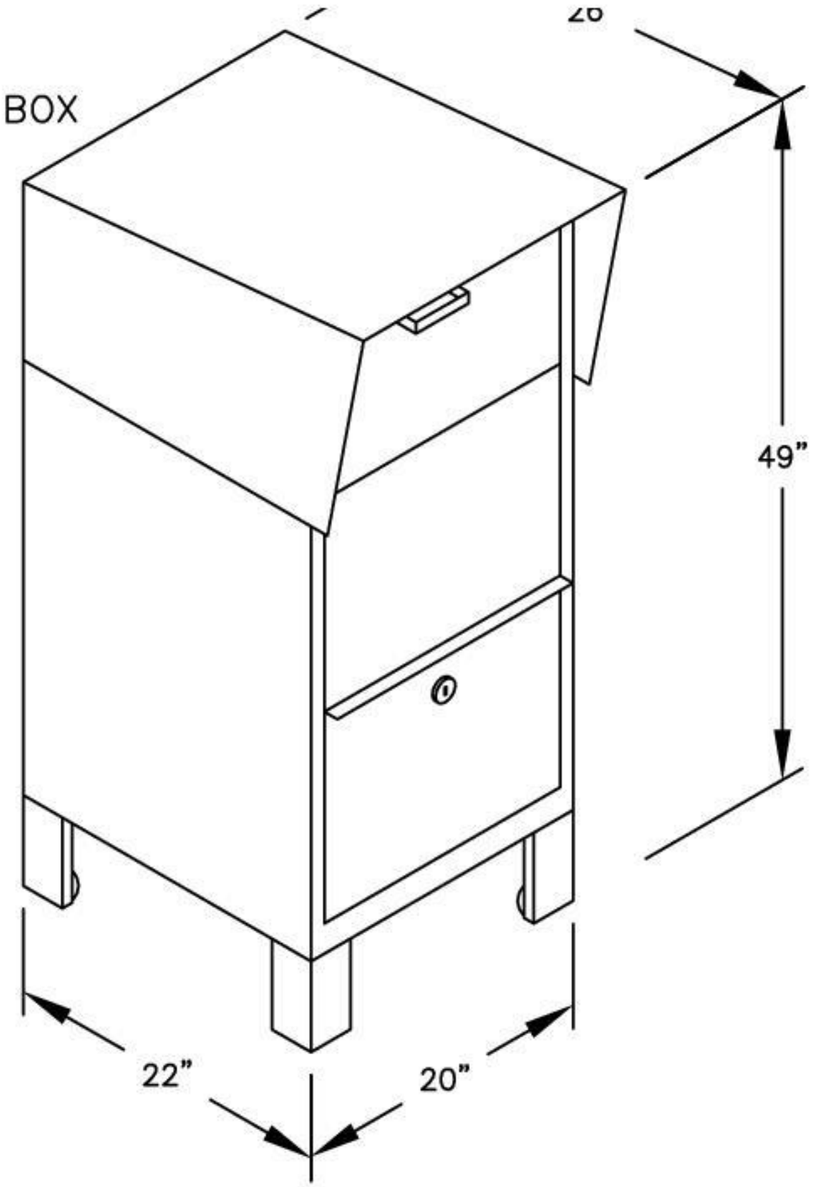

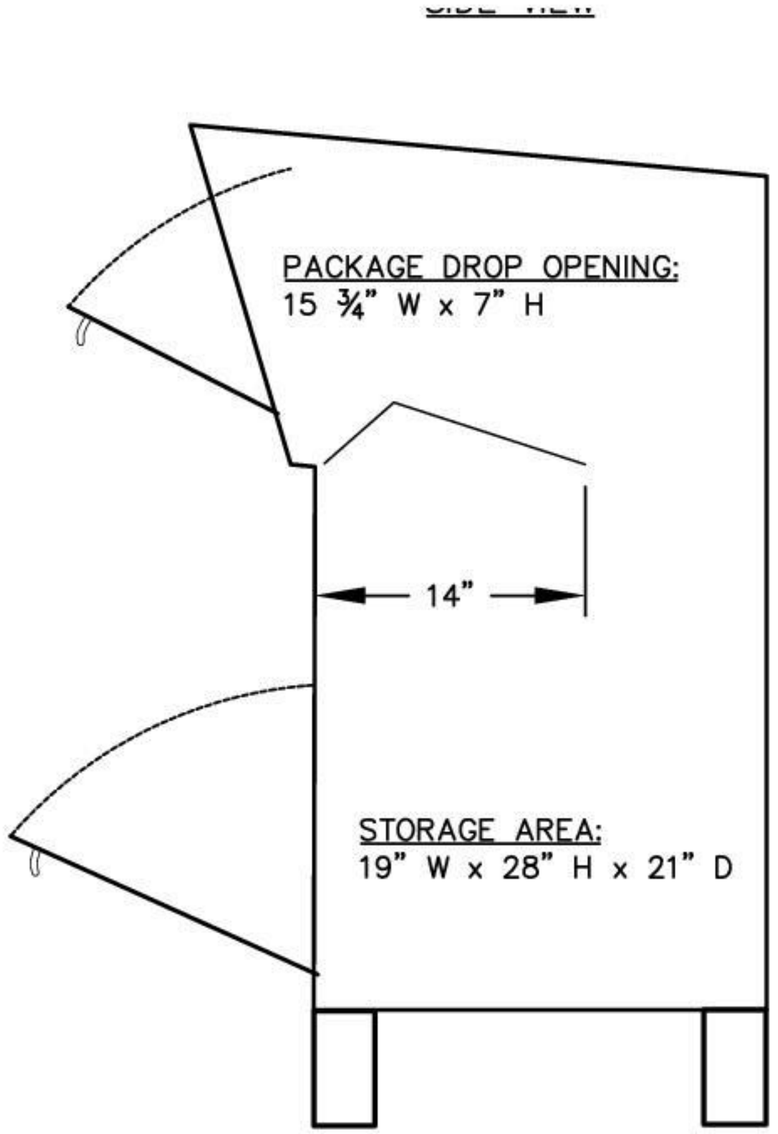

MODEL #4975
COURIER BOX