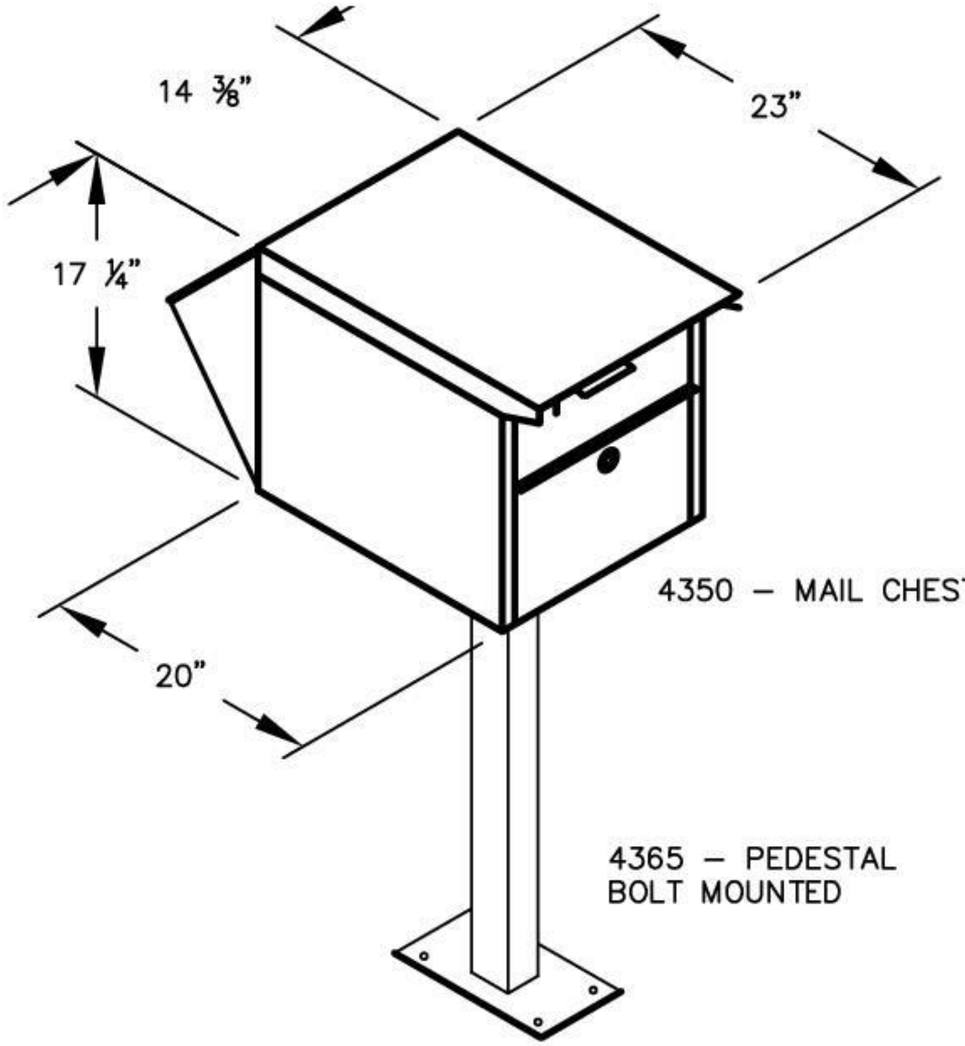

4350 – MAIL CHEST

4365 – PEDESTAL
BOLT MOUNTED

PEDESTAL TOP BOLT PATTERN

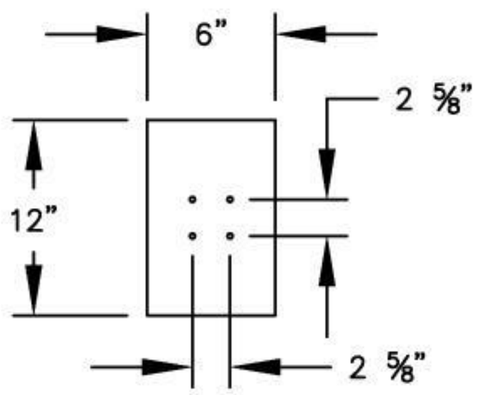

PEDESTAL BASE BOLT PATTERN

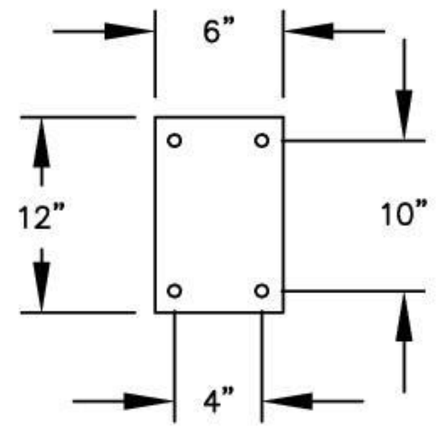

PEDESTAL SIDE VIEW

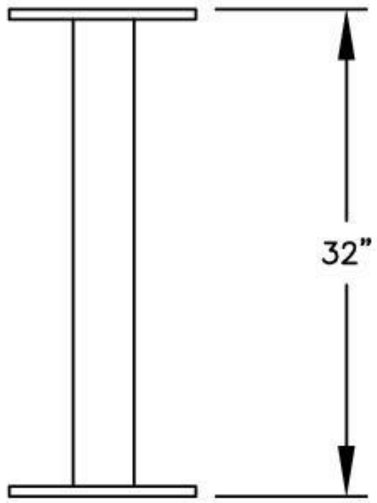

MAIL CHEST DISPLAYED WITH OPTIONAL BOLT MOUNTED PEDESTAL. IN–GROUND MOUNTED PEDESTAL AVAILABLE AS AN OPTION.

MODEL #4350
MAIL CHEST

FRONT AND REAR ACCESS