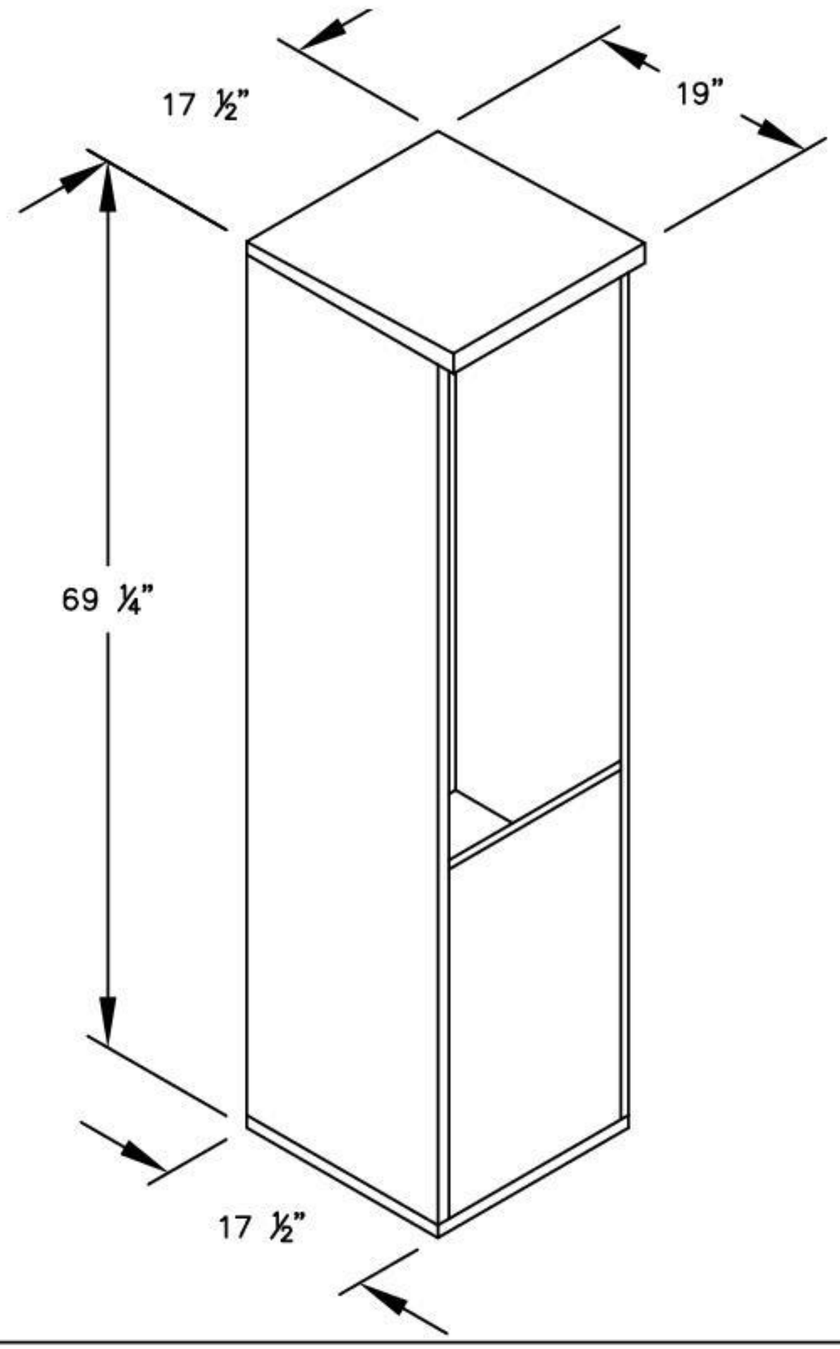

MODEL #3911S

4C HORIZONTAL MAILBOX ENCLOSURE – FREE–STANDING
FOR SINGLE COLUMN 11 DOOR HIGH UNITS

DESIGNED TO ACCOMMODATE SALSBURY 3700 SERIES
SINGLE COLUMN 11 DOOR HIGH FRONT LOADING
4C HORIZONTAL MAILBOXES:

#3711S–09
#3711S–04
#3711S–2P
#3711S–1B
#3711S–1C

MODEL #3911S

4C HORIZONTAL MAILBOX ENCLOSURE

FREE–STANDING
FOR SINGLE COLUMN 11 DOOR HIGH UNITS

AVAILABLE COLORS:
ALUMINUM, BRONZE, SANDSTONE OR BLACK

DRAWN: 3/2020