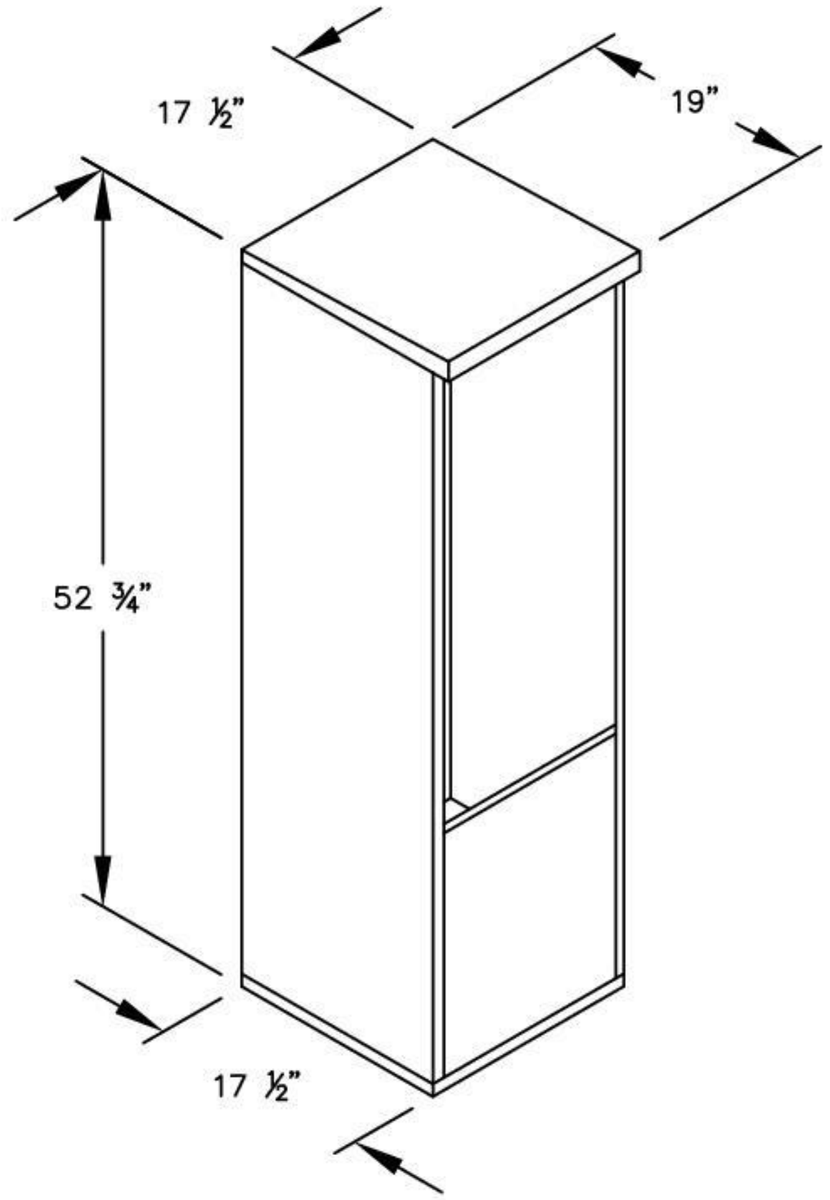

MODEL #3910S

4C HORIZONTAL MAILBOX ENCLOSURE – FREE–STANDING
FOR SINGLE COLUMN 10 DOOR HIGH UNITS

DESIGNED TO ACCOMMODATE SALSBURY 3700 SERIES
SINGLE COLUMN 10 DOOR HIGH FRONT LOADING
4C HORIZONTAL MAILBOXES:

#3710S–04
#3710S–03
#3710S–2P
#3710S–1B
#3710S–1C

MODEL #3910S

4C HORIZONTAL MAILBOX ENCLOSURE
FREE–STANDING
FOR SINGLE COLUMN 10 DOOR HIGH UNITS

AVAILABLE COLORS:
ALUMINUM, BRONZE, SANDSTONE OR BLACK

DRAWN: 3/2020