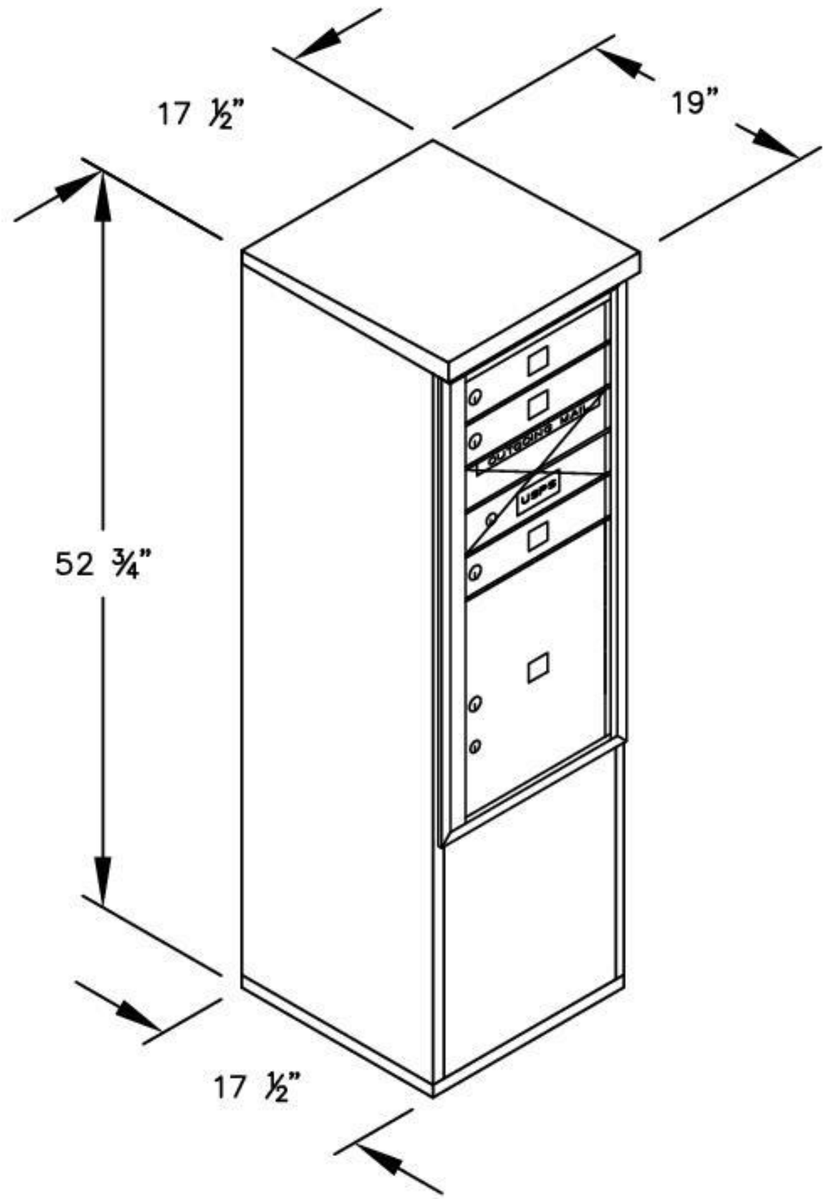

MODEL #3910S–03 – FRONT LOADING

(3) 'MB1' DOORS
(1) 'OM2' OUTGOING MAIL COMPARTMENT
(1) PL5 PARCEL LOCKER (17 ¼" H)

MODEL #3910S–03

4C HORIZONTAL MAILBOXES–FRONT LOADING

AVAILABLE COLORS:
ALUMINUM, BRONZE, SANDSTONE OR BLACK

AVAILABLE FOR:
USPS ACCESS OR PRIVATE ACCESS

DRAWN: 3/2020