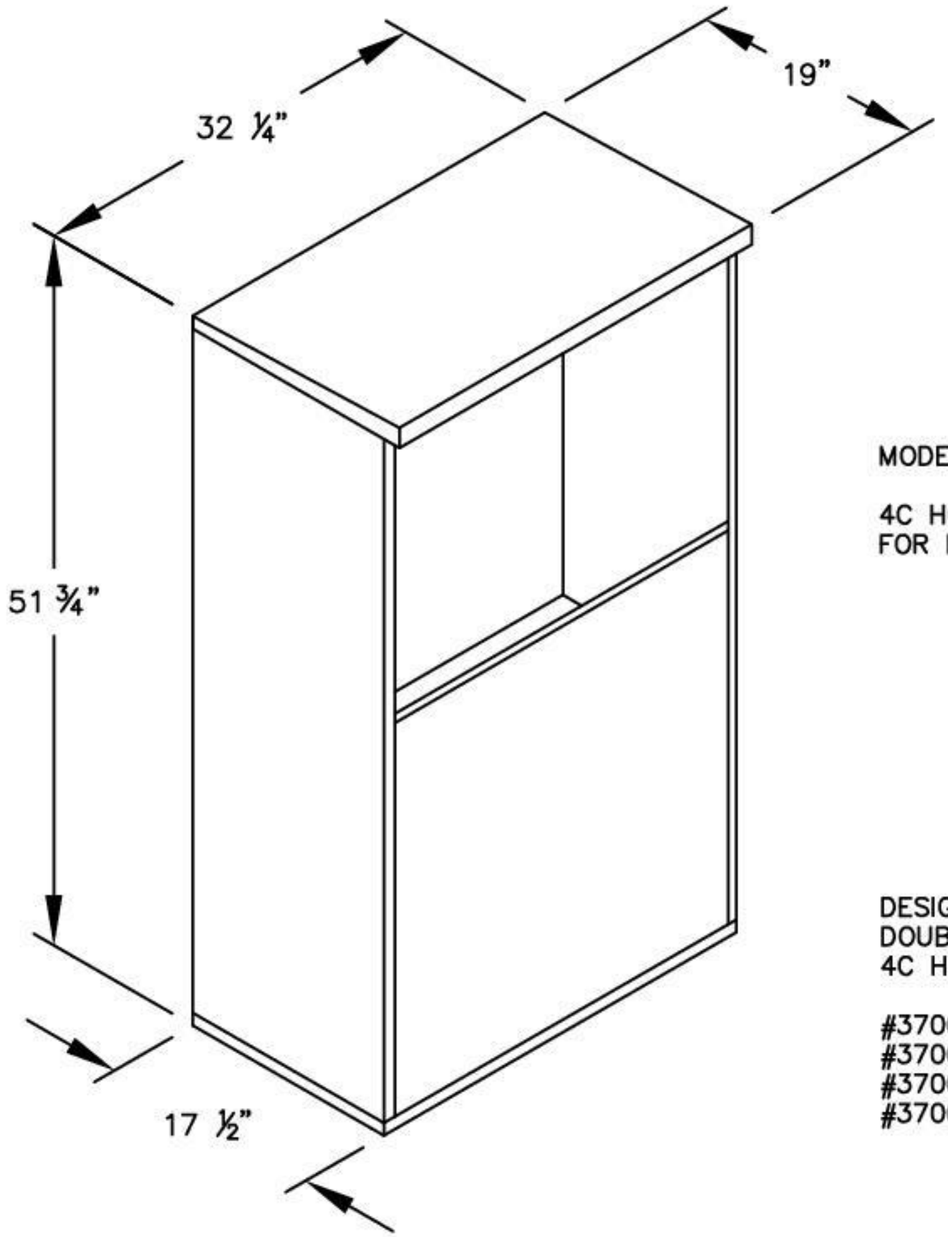

MODEL #3906D

4C HORIZONTAL MAILBOX ENCLOSURE – FREE–STANDING
FOR DOUBLE COLUMN 6 DOOR HIGH UNITS

DESIGNED TO ACCOMMODATE SALSBURY 3700 SERIES
DOUBLE COLUMN 6 DOOR HIGH FRONT LOADING
4C HORIZONTAL MAILBOXES:

#3706D–10
#3706D–09
#3706D–05
#3706D–2P

MODEL #3906D

4C HORIZONTAL MAILBOX ENCLOSURE

FREE–STANDING
FOR DOUBLE COLUMN 6 DOOR HIGH UNITS

AVAILABLE COLORS:
ALUMINUM, BRONZE, SANDSTONE OR BLACK

DRAWN: 3/2020