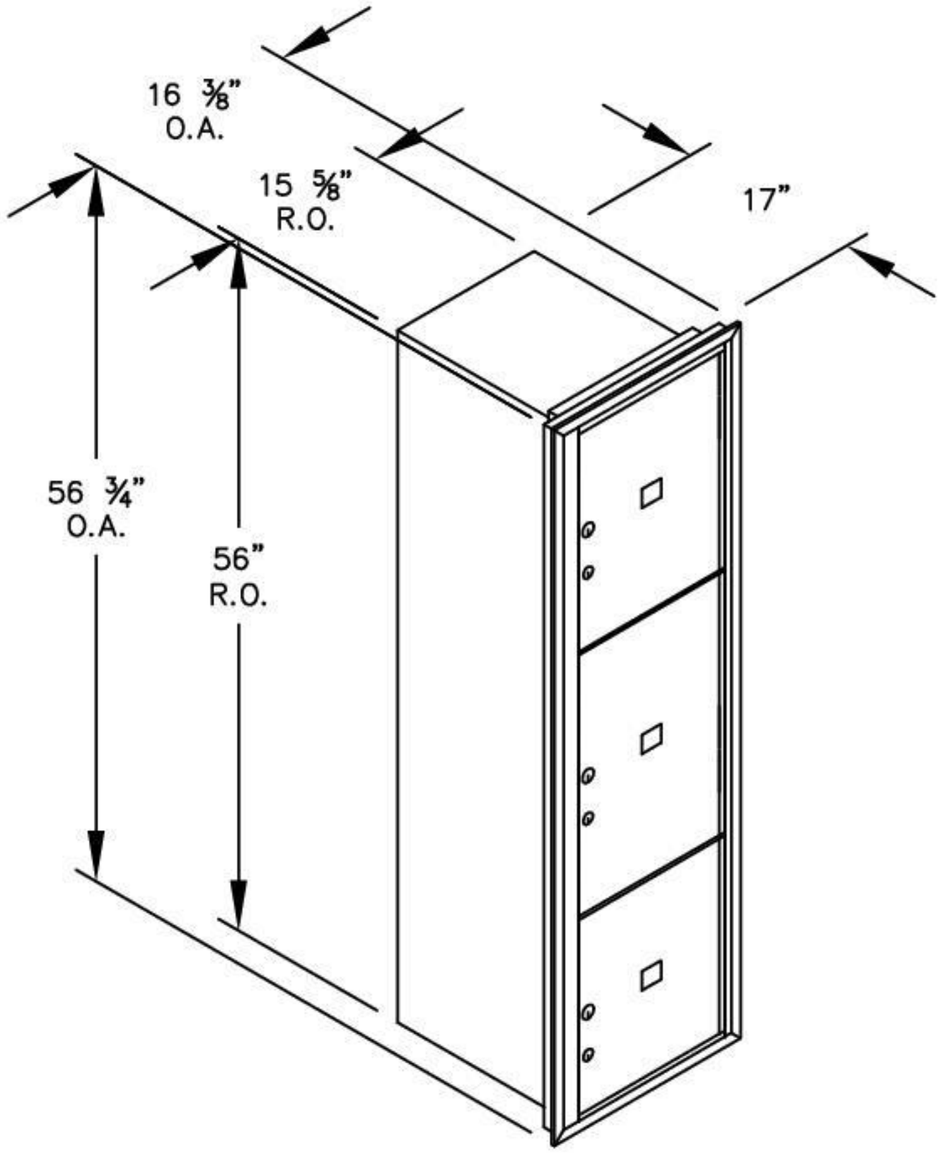

(1) 3716S–3P – REAR LOADING

(1) PL4.5 PARCEL LOCKER (15 ½" H)
(1) PL5 PARCEL LOCKER (17 ¼" H)
(1) PL6 PARCEL LOCKER (20 ¾" H)

MODEL #3716S–3P

4C HORIZONTAL MAILBOXES–REAR LOADING

AVAILABLE COLORS:
ALUMINUM, BRONZE, SANDSTONE OR BLACK

AVAILABLE FOR:
USPS ACCESS OR PRIVATE ACCESS

DRAWN: 3/2020