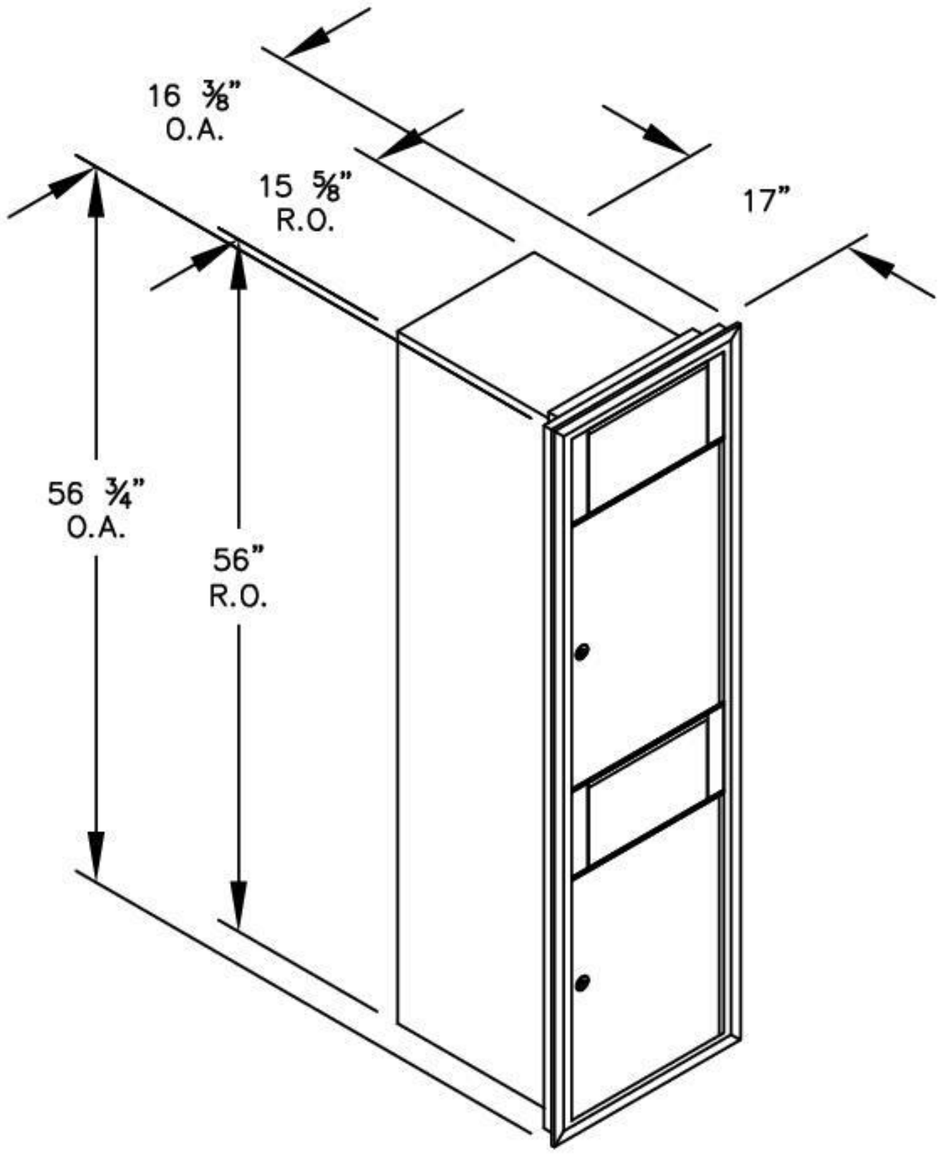

(1) 3716S–2B – FRONT LOADING

MODEL #3716S–2B

4C HORIZONTAL RECEPTACLE BIN –
FRONT LOADING

AVAILABLE COLORS:
ALUMINUM, BRONZE, SANDSTONE OR BLACK

AVAILABLE FOR:
PRIVATE ACCESS

DRAWN: 3/2020