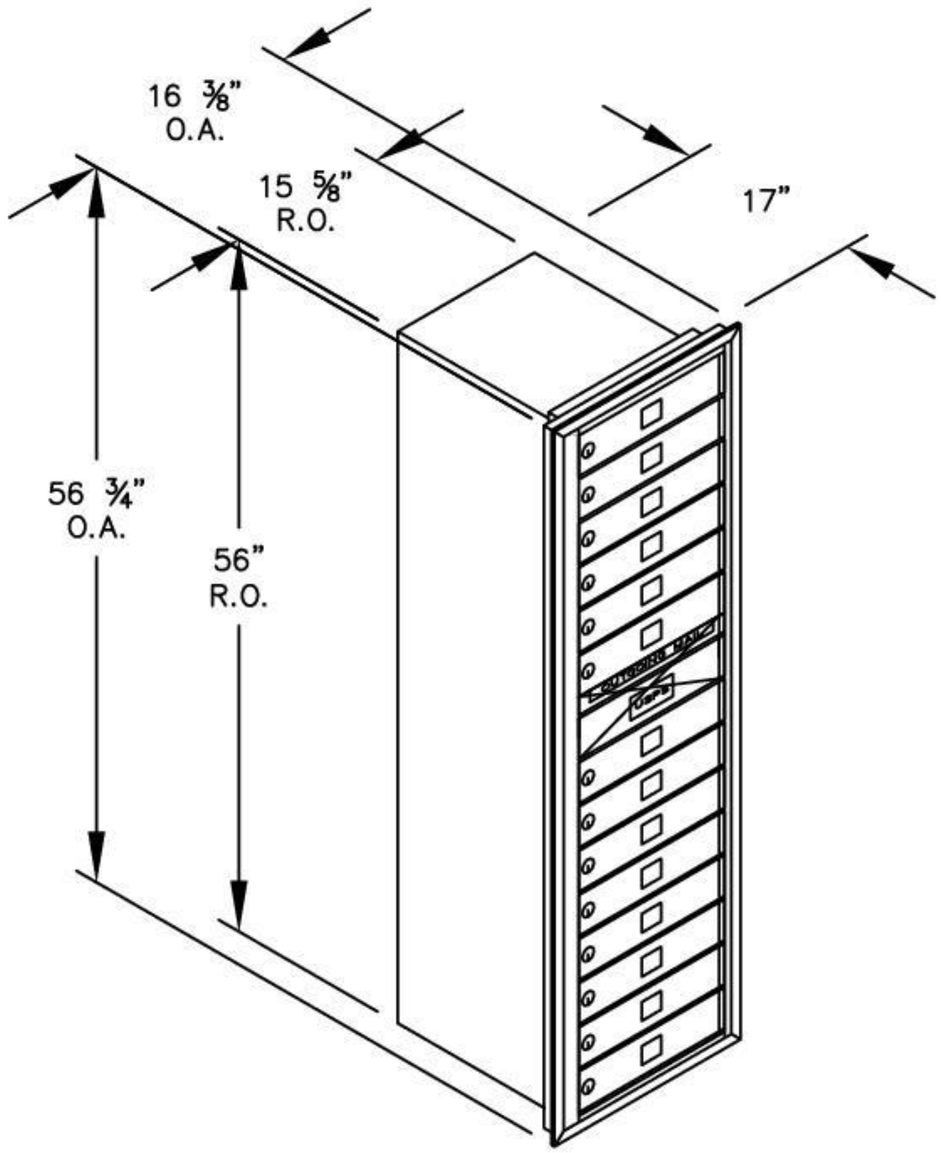

(1) 3716S–14 – REAR LOADING

(14) 'MB1' DOORS
(1) 'OM1.5' OUTGOING MAIL COMPARTMFNT

MODEL #3716S–14

4C HORIZONTAL MAILBOXES–REAR LOADING

AVAILABLE COLORS:
ALUMINUM, BRONZE, SANDSTONE OR BLACK

AVAILABLE FOR:
PRIVATE ACCESS

DRAWN: 3/2020