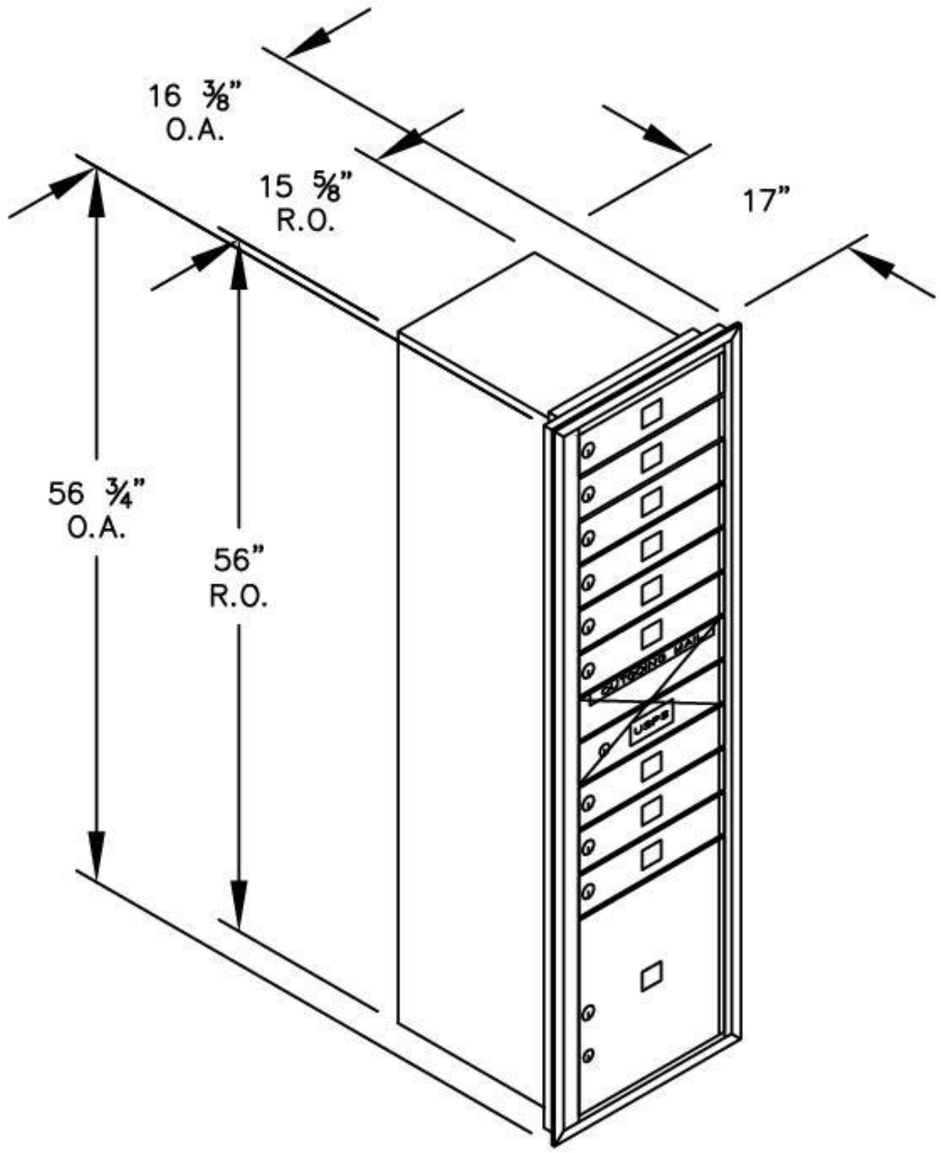

(1) 3716S–09 – REAR LOADING

(9) 'MB1' DOORS
(1) 'OM2' OUTGOING MAIL COMPARTMENT
(1) PARCEL LOCKER (15 ½" H)

MODEL #3716S–09

4C HORIZONTAL MAILBOXES–REAR LOADING

AVAILABLE COLORS:
ALUMINUM, BRONZE, GOLD OR SANDSTONE

AVAILABLE FOR:
USPS ACCESS OR PRIVATE ACCESS