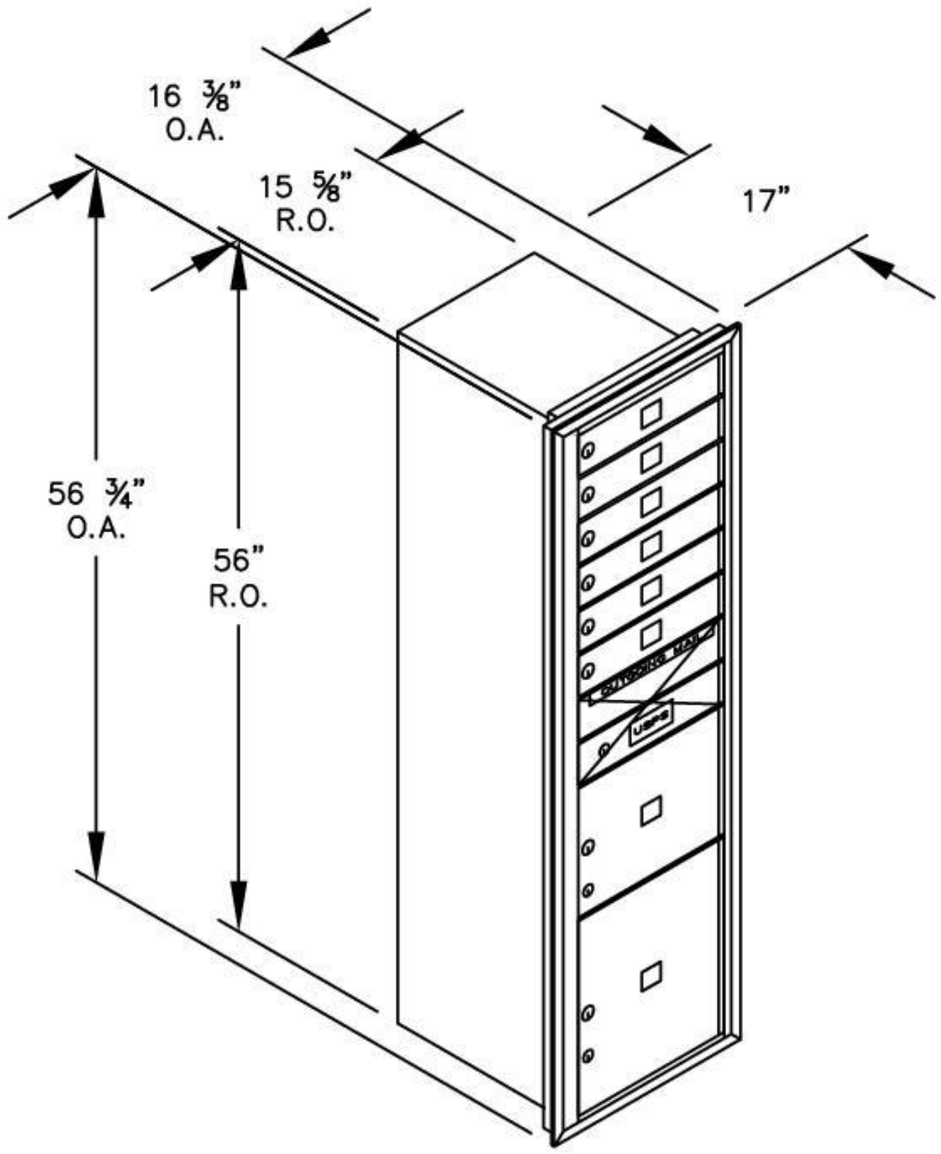

(1) 3716S–06 – FRONT LOADING

(6) 'MB1' DOORS
(1) 'OM2' OUTGOING MAIL COMPARTMENT
(1) PL3 PARCEL LOCKER (10 ¼" H)
(1) PL4.5 PARCEL LOCKER (15 ½" H)

MODEL #3716S–06

4C HORIZONTAL MAILBOXES–FRONT LOADING

AVAILABLE COLORS:
ALUMINUM, BRONZE, SANDSTONE OR BLACK

AVAILABLE FOR:
USPS ACCESS OR PRIVATE ACCESS

DRAWN: 3/2020