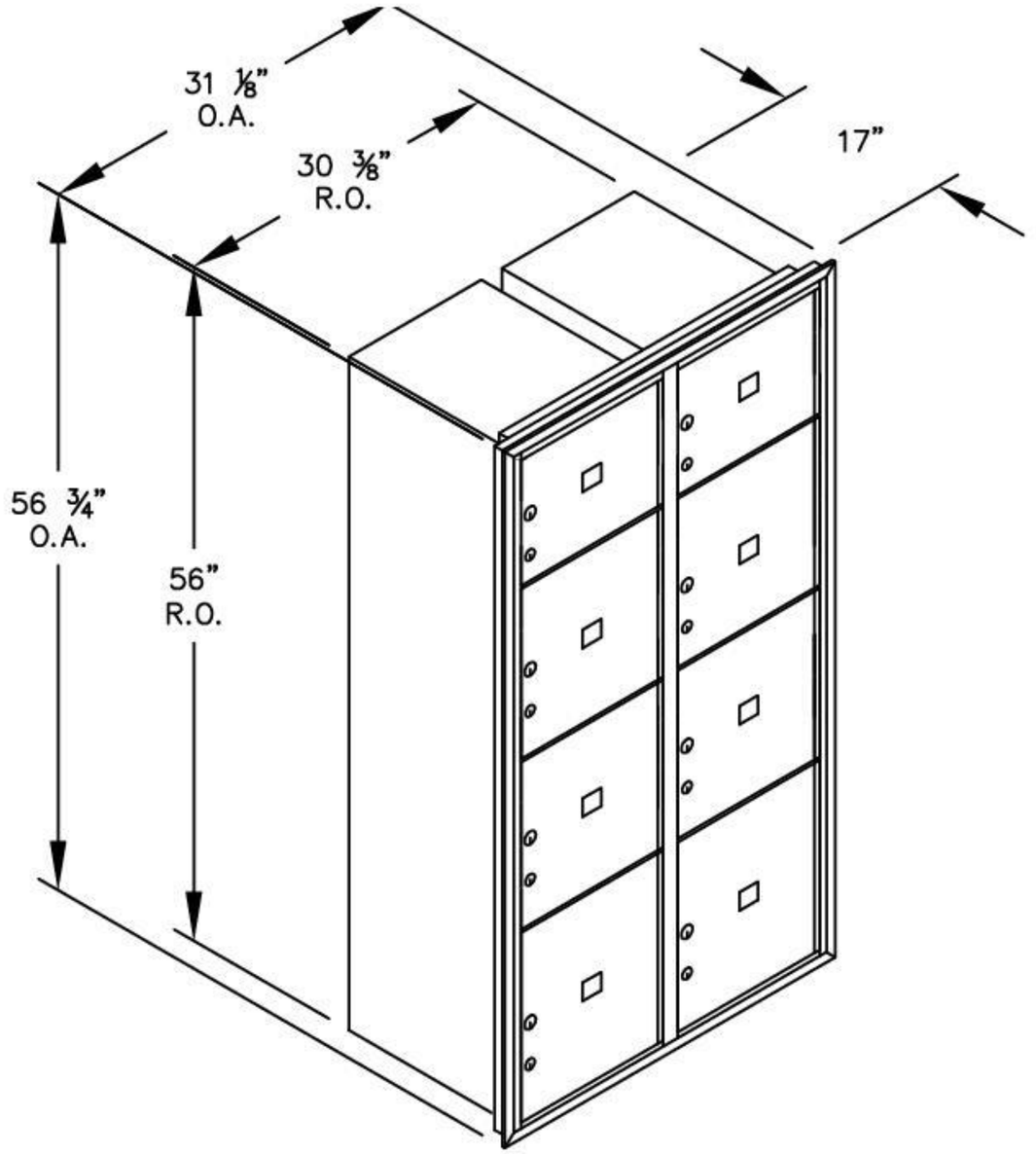

(1) 3716D–8P – FRONT LOADING

(2) PL3 PARCEL LOCKERS (10 ¼" H)
(4) PL4 PARCEL LOCKERS (13 ¾" H)
(2) PL4.5 PARCEL LOCKERS (15 ½" H)

MODEL #3716D–8P

4C HORIZONTAL MAILBOXES–FRONT LOADING

AVAILABLE COLORS:
ALUMINUM, BRONZE, SANDSTONE OR BLACK

AVAILABLE FOR:
USPS ACCESS OR PRIVATE ACCESS

DRAWN: 3/2020