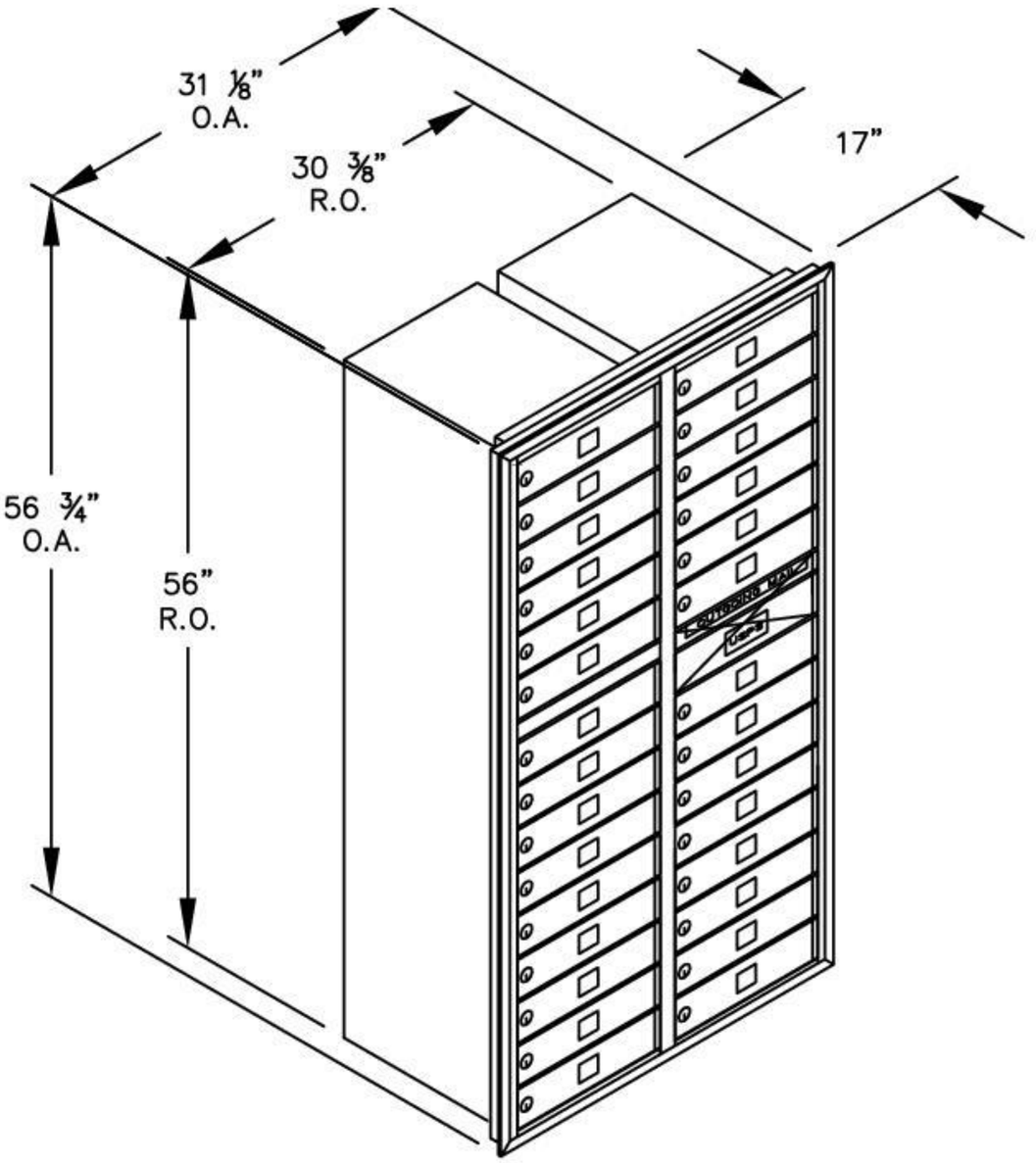

(1) 3716D–29 – REAR LOADING

(29) 'MB1' DOORS
(1) 'OM1.5' OUTGOING MAIL COMPARTMFNT

MODEL #3716D–29

4C HORIZONTAL MAILBOXES–REAR LOADING

AVAILABLE COLORS:
ALUMINUM, BRONZE, SANDSTONE OR BLACK

AVAILABLE FOR:
PRIVATE ACCESS

DRAWN: 3/2020