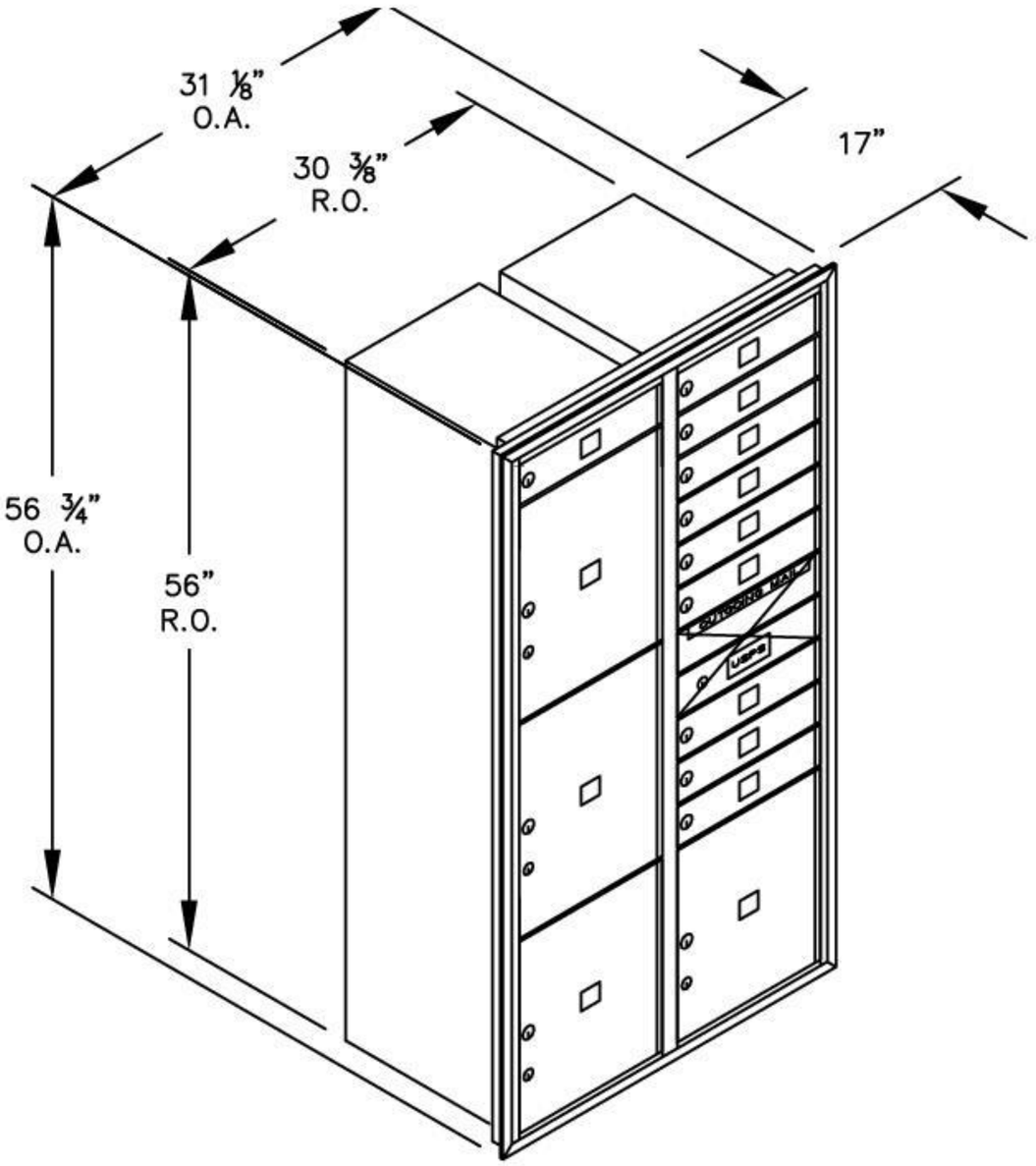

(1) 3716D–10 – FRONT LOADING

(10) 'MB1' DOORS
(1) 'OM2' OUTGOING MAIL COMPARTMENT
(2) PL4.5 PARCEL LOCKERS (15 ½" H)
(2) PL5 PARCEL LOCKERS (17 ¼" H)

MODEL #3716D–10

4C HORIZONTAL MAILBOXES–FRONT LOADING

AVAILABLE COLORS:
ALUMINUM, BRONZE, SANDSTONE OR BLACK

AVAILABLE FOR:
USPS ACCESS OR PRIVATE ACCESS

DRAWN: 3/2020