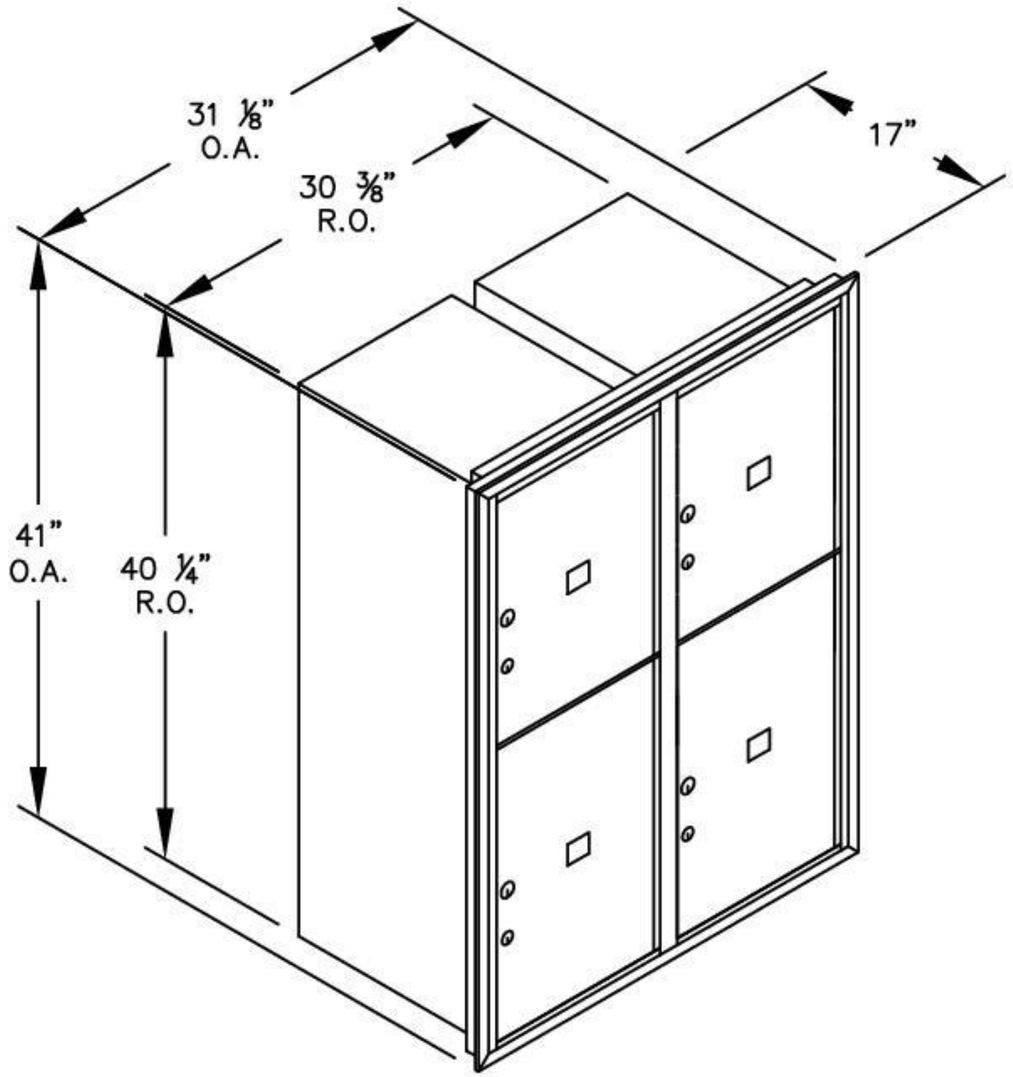

(1) 3711D–4P – FRONT LOADING

(2) PL5 PARCEL LOCKERS (17 ¼" H)
(2) PL6 PARCEL LOCKERS (20 ¾" H)

MODEL #3711D–4P

4C HORIZONTAL MAILBOXES–FRONT LOADING

AVAILABLE COLORS:
ALUMINUM, BRONZE, SANDSTONE OR BLACK

AVAILABLE FOR:
USPS ACCESS OR PRIVATE ACCESS

DRAWN: 3/2020