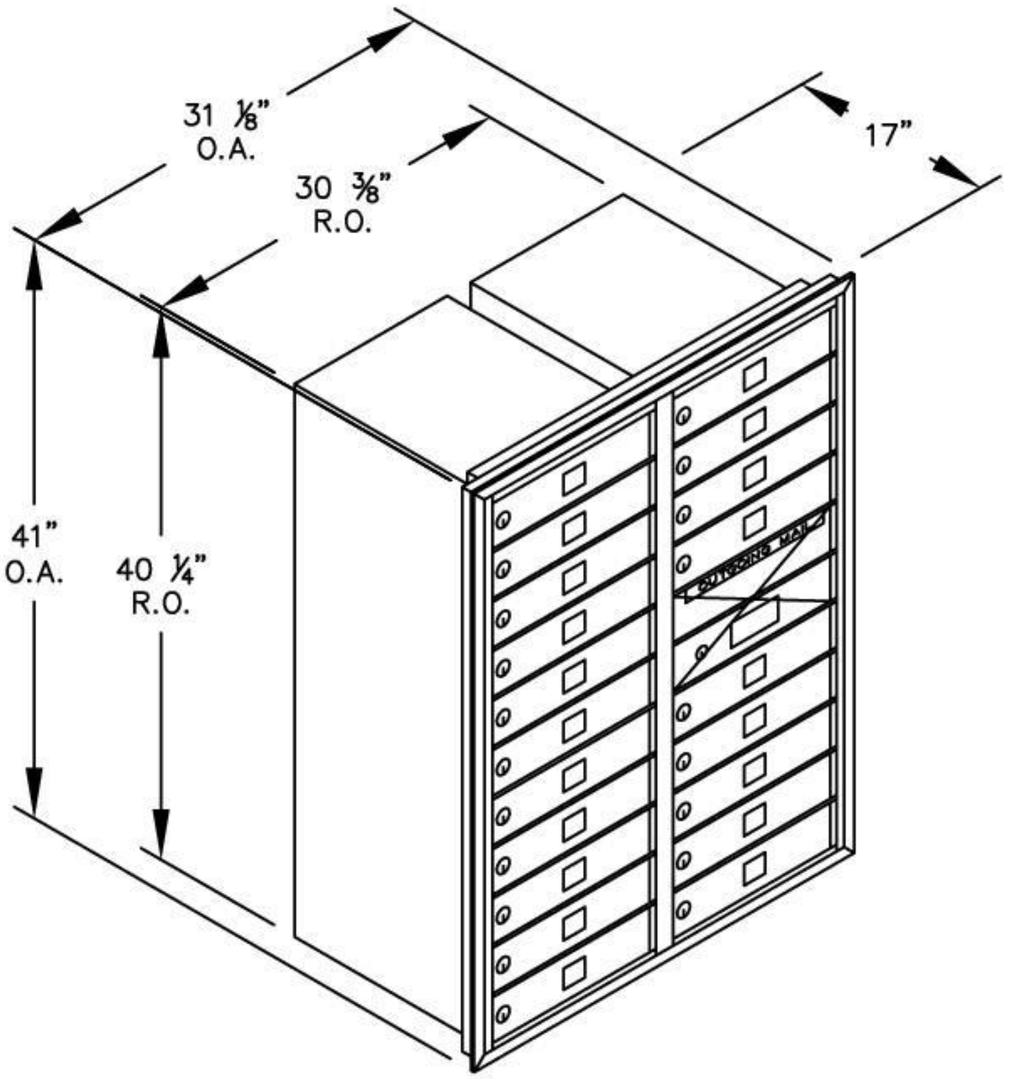

(1) 3711D–20 – FRONT LOADING

(20) 'MB1' DOORS
(1) 'OM2' OUTGOING MAIL COMPARTMENT

MODEL #3711D–20

4C HORIZONTAL MAILBOXES–FRONT LOADING

AVAILABLE COLORS:
ALUMINUM, BRONZE, GOLD OR SANDSTONE

AVAILABLE FOR:
USPS ACCESS OR PRIVATE ACCESS