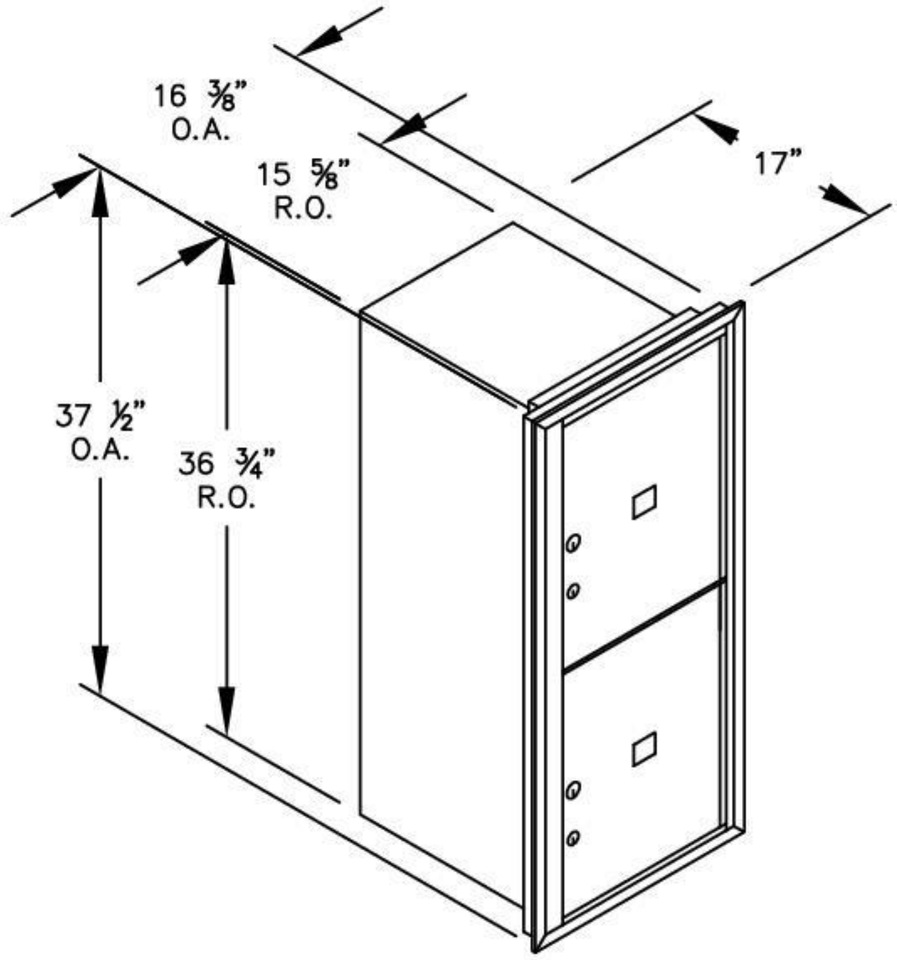

(1) 3710S–2P – FRONT LOADING

(2) PL5 PARCEL LOCKERS (17 ¼" H)

MODEL #3710S–2P

4C HORIZONTAL MAILBOXES–FRONT LOADING

AVAILABLE COLORS:
ALUMINUM, BRONZE, SANDSTONE OR BLACK

AVAILABLE FOR:
USPS ACCESS OR PRIVATE ACCESS

DRAWN: 3/2020