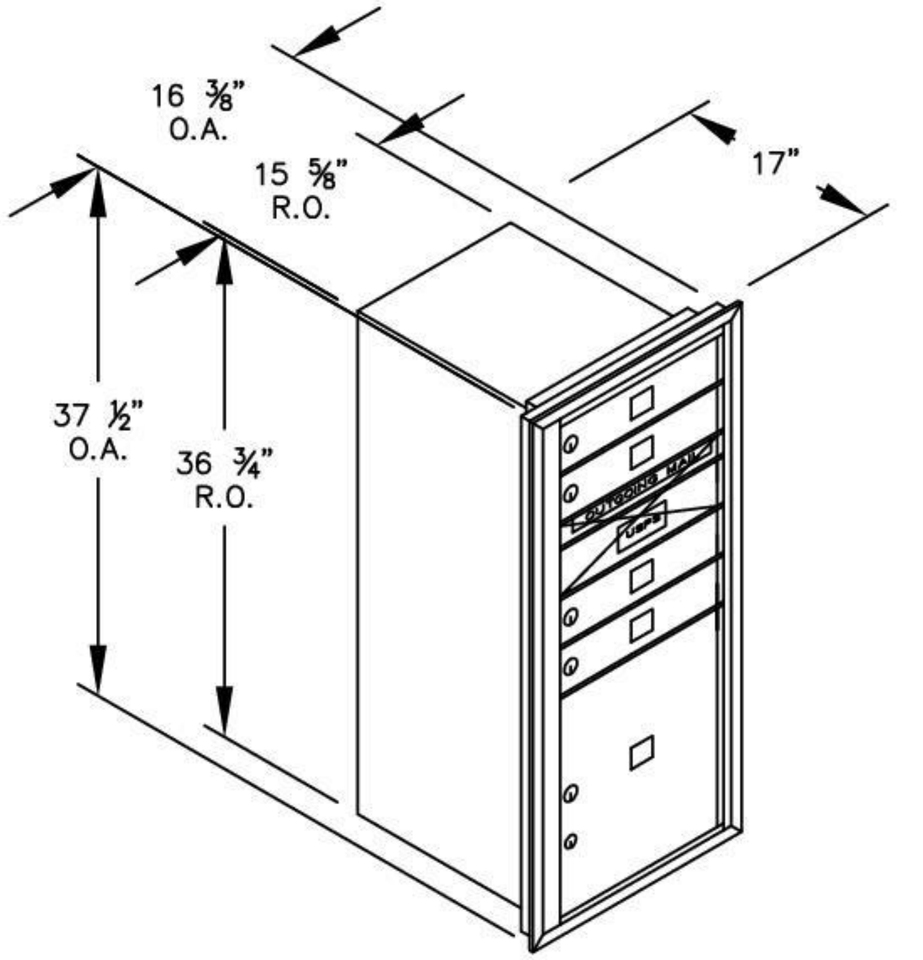

(1) 3710S – 04 – REAR LOADING

(4) 'MB1' DOORS
(1) 'OM1.5' OUTGOING MAIL COMPARTMENT
(1) PL4.5 PARCEL LOCKER (15 ½" H)

MODEL #3710S–04

4C HORIZONTAL MAILBOXES–REAR LOADING

AVAILABLE COLORS:
ALUMINUM, BRONZE, SANDSTONE OR BLACK

AVAILABLE FOR:
USPS ACCESS OR PRIVATE ACCESS

DRAWN: 3/2020