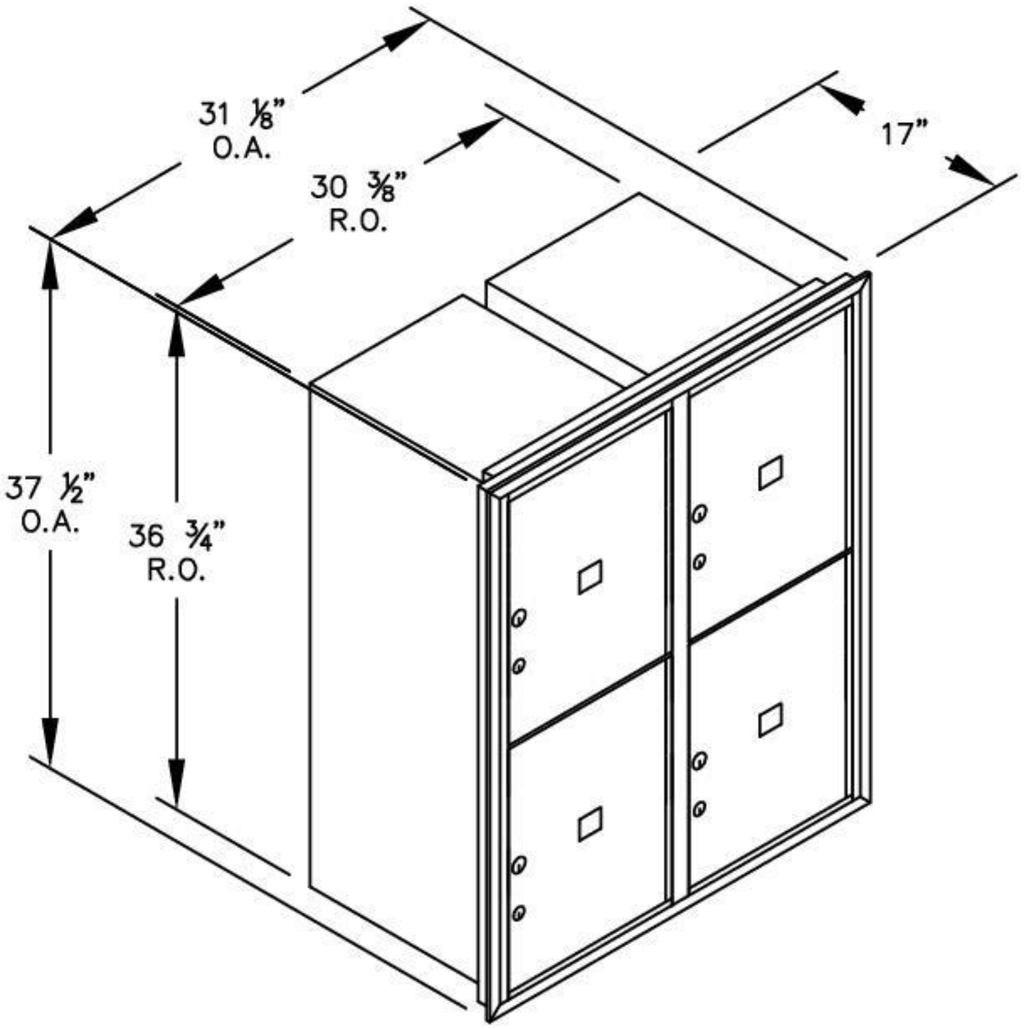

(1) 3710D–4P – FRONT LOADING

(4) PL5 PARCEL LOCKERS (17 1/4" H)

MODEL #3710D–4P

4C HORIZONTAL MAILBOXES–FRONT LOADING

AVAILABLE COLORS:
ALUMINUM, BRONZE, SANDSTONE OR BLACK

AVAILABLE FOR:
USPS ACCESS OR PRIVATE ACCESS

DRAWN: 3/2020