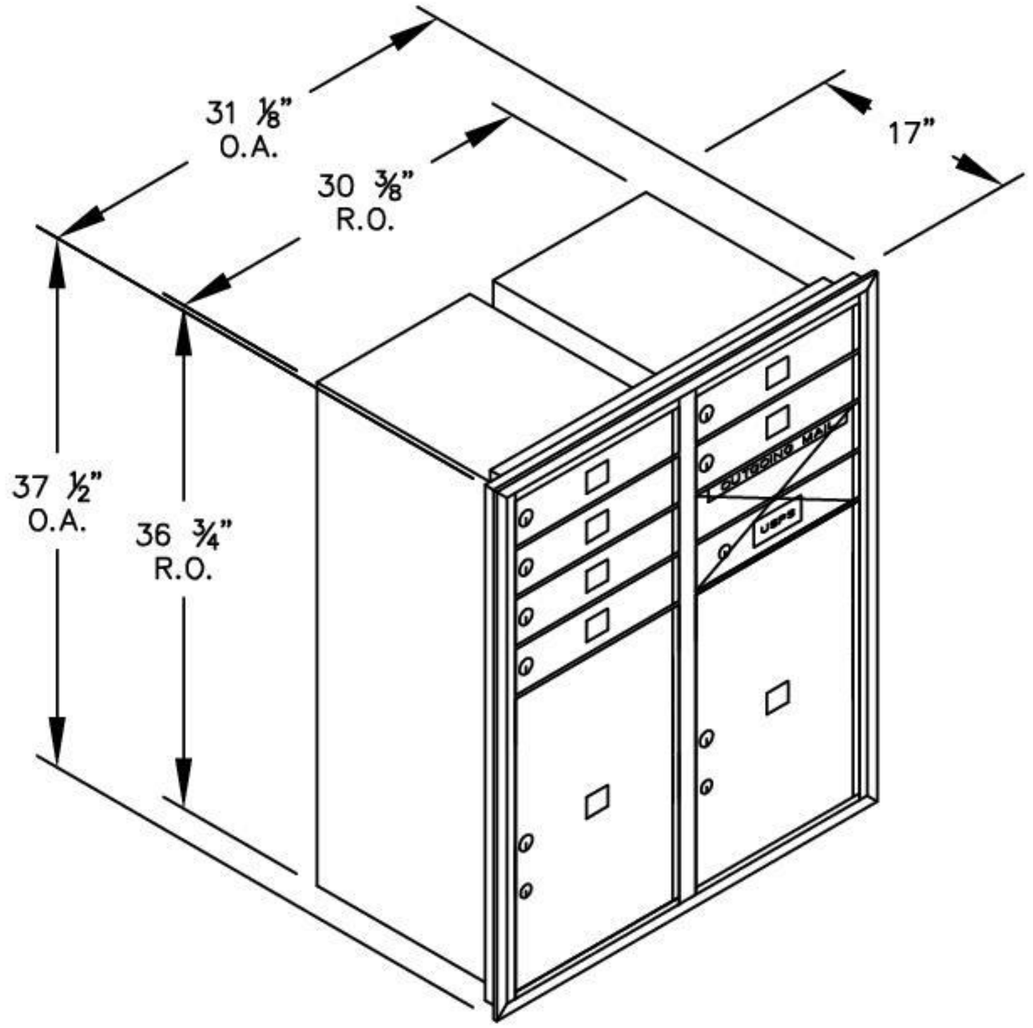

(1) 3710D–06 – FRONT LOADING

(6) 'MB1' DOORS
(1) 'OM2' OUTGOING MAIL COMPARTMENT
(2) PL6 PARCEL LOCKERS (20 3/4" H)

MODEL #3710D–06

4C HORIZONTAL MAILBOXES–FRONT LOADING

AVAILABLE COLORS:
ALUMINUM, BRONZE, SANDSTONE OR BLACK

AVAILABLE FOR:
USPS ACCESS OR PRIVATE ACCESS

DRAWN: 3/2020