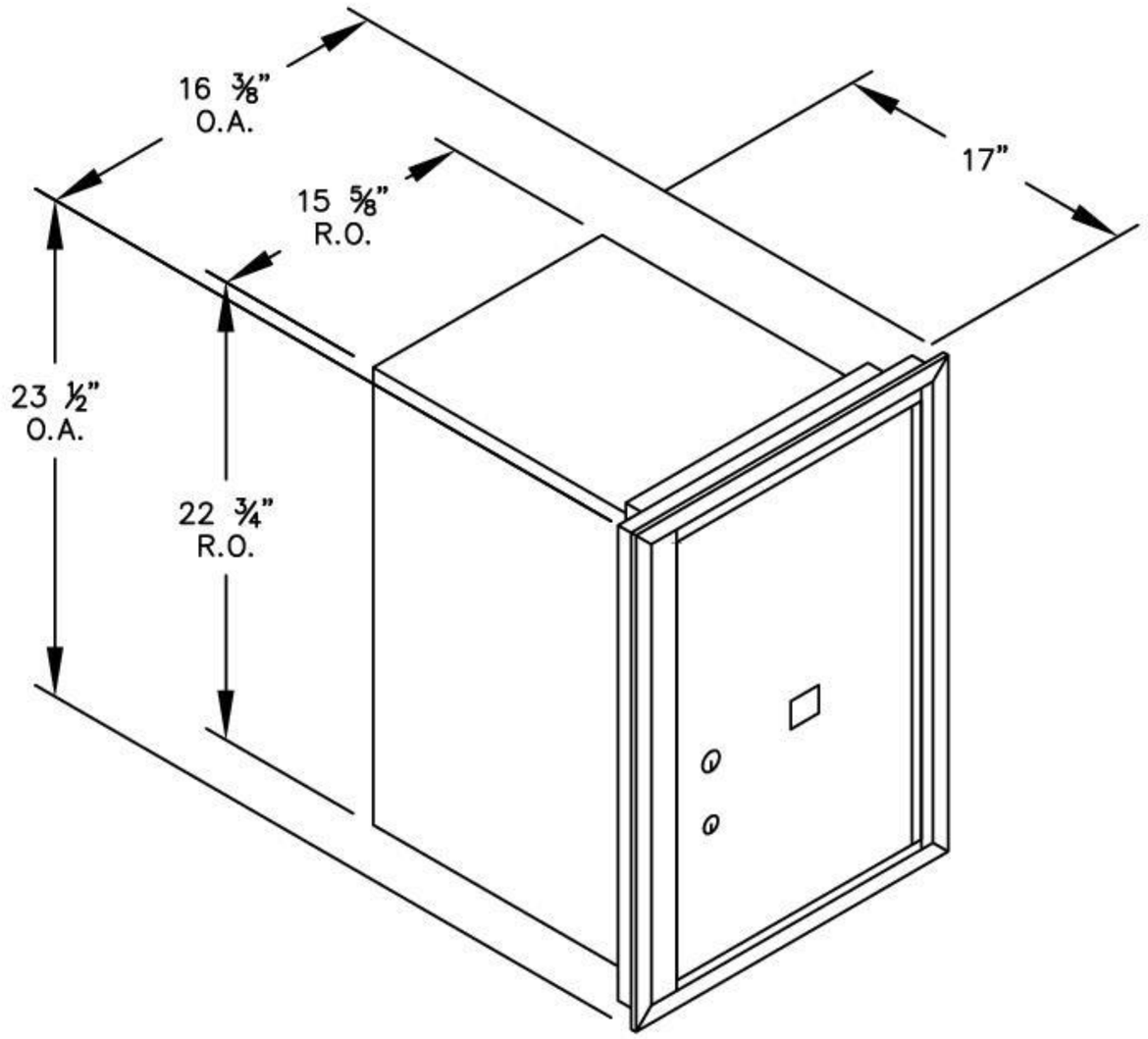

(1) 3706S–1P – FRONT LOADING

(1) PL6 PARCEL LOCKER

MODEL #3706S–1P

4C HORIZONTAL MAILBOXES–FRONT LOADING

AVAILABLE COLORS:
ALUMINUM, BRONZE, GOLD OR SANDSTONE

AVAILABLE FOR:
USPS ACCESS OR PRIVATE ACCESS