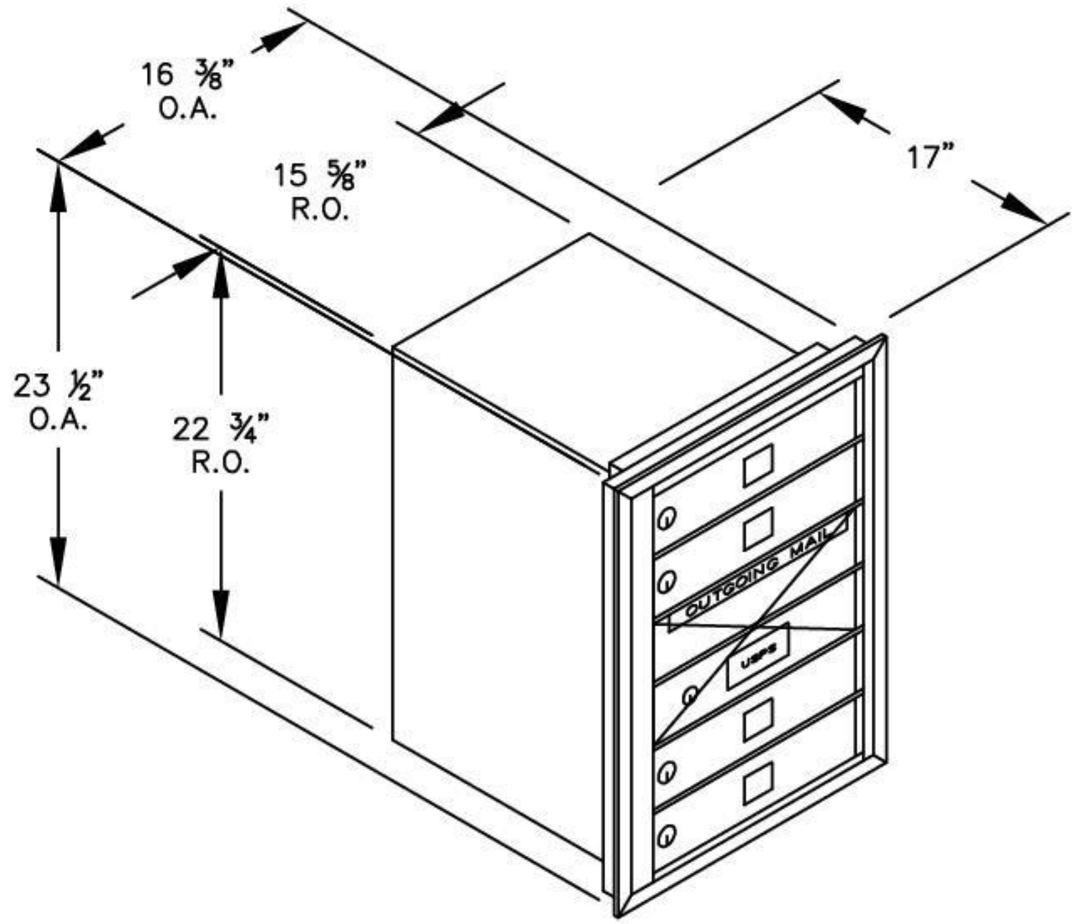


(1) 3706S–04 – FRONT LOADING

(4) 'MB1' DOORS
(1) 'OM2' OUTGOING MAIL COMPARTMENT

# MODEL #3706S–04

4C HORIZONTAL MAILBOXES–FRONT LOADING

AVAILABLE COLORS:
ALUMINUM, BRONZE, SANDSTONE OR BLACK

AVAILABLE FOR:
USPS ACCESS OR PRIVATE ACCESS

DRAWN: 3/2020