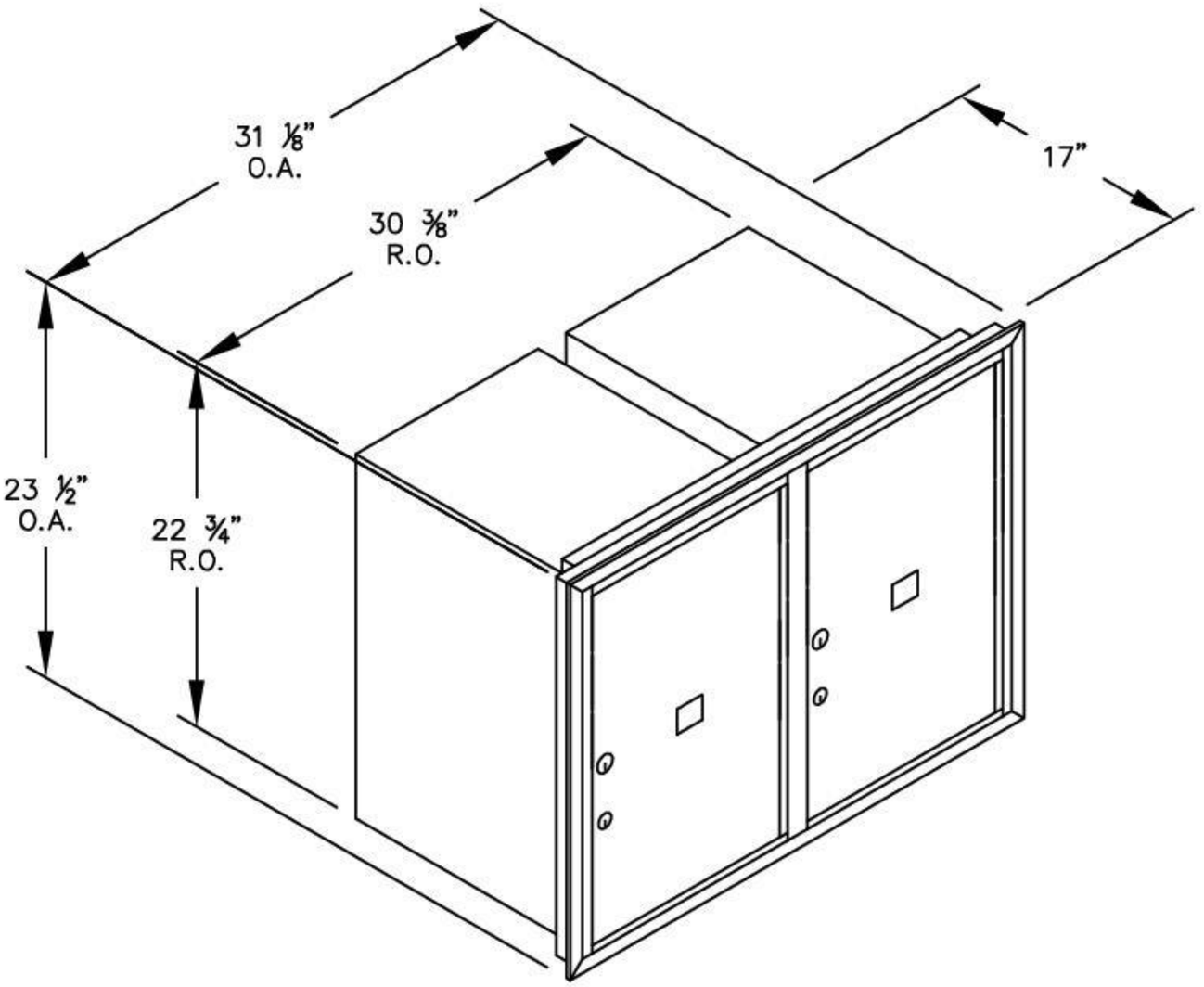

(1) 3706D–2P – FRONT LOADING

(2) PL6 PARCEL LOCKERS (20 3/4" H)

MODEL #3706D–2P

4C HORIZONTAL MAILBOXES–FRONT LOADING

AVAILABLE COLORS:
ALUMINUM, BRONZE, SANDSTONE OR BLACK

AVAILABLE FOR:
USPS ACCESS OR PRIVATE ACCESS

DRAWN: 3/2020