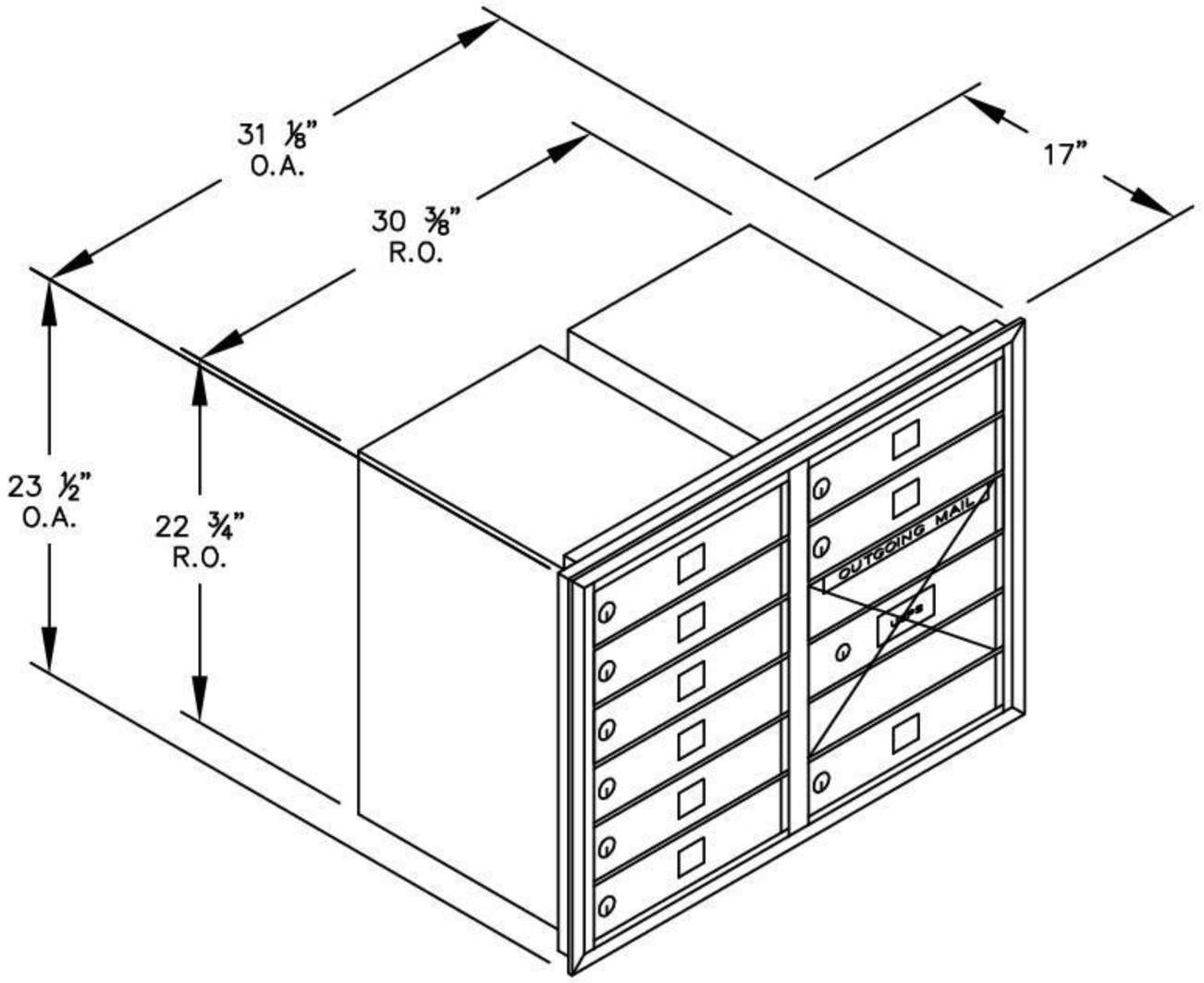

(1) 3706D–09 – FRONT LOADING

(9) 'MB1' DOORS
(1) 'OM3' OUTGOING MAIL COMPARTMENT

MODEL #3706D–09

4C HORIZONTAL MAILBOXES–FRONT LOADING

AVAILABLE COLORS:
ALUMINUM, BRONZE, SANDSTONE OR BLACK

AVAILABLE FOR:
USPS ACCESS OR PRIVATE ACCESS

DRAWN: 3/2020