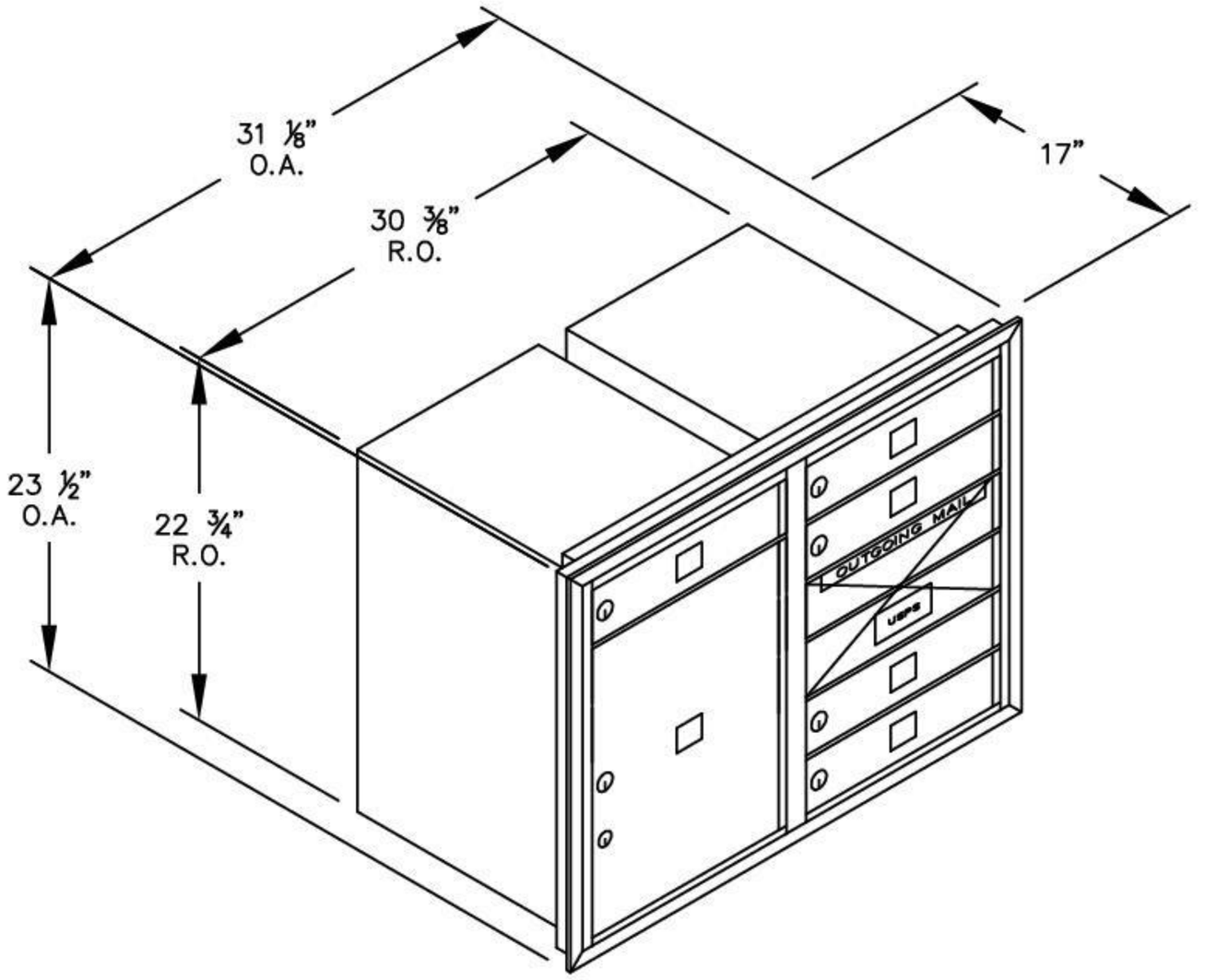

(1) 3706D – 05 – REAR LOADING

(5) 'MB1' DOORS
(1) 'OM2' OUTGOING MAIL COMPARTMENT
(1) PL5 PARCEL LOCKER (17 1/4" H)

MODEL #3706D–05

4C HORIZONTAL MAILBOXES–REAR LOADING

AVAILABLE COLORS:
ALUMINUM, BRONZE, SANDSTONE OR BLACK

AVAILABLE FOR:
USPS ACCESS OR PRIVATE ACCESS

DRAWN: 3/2020