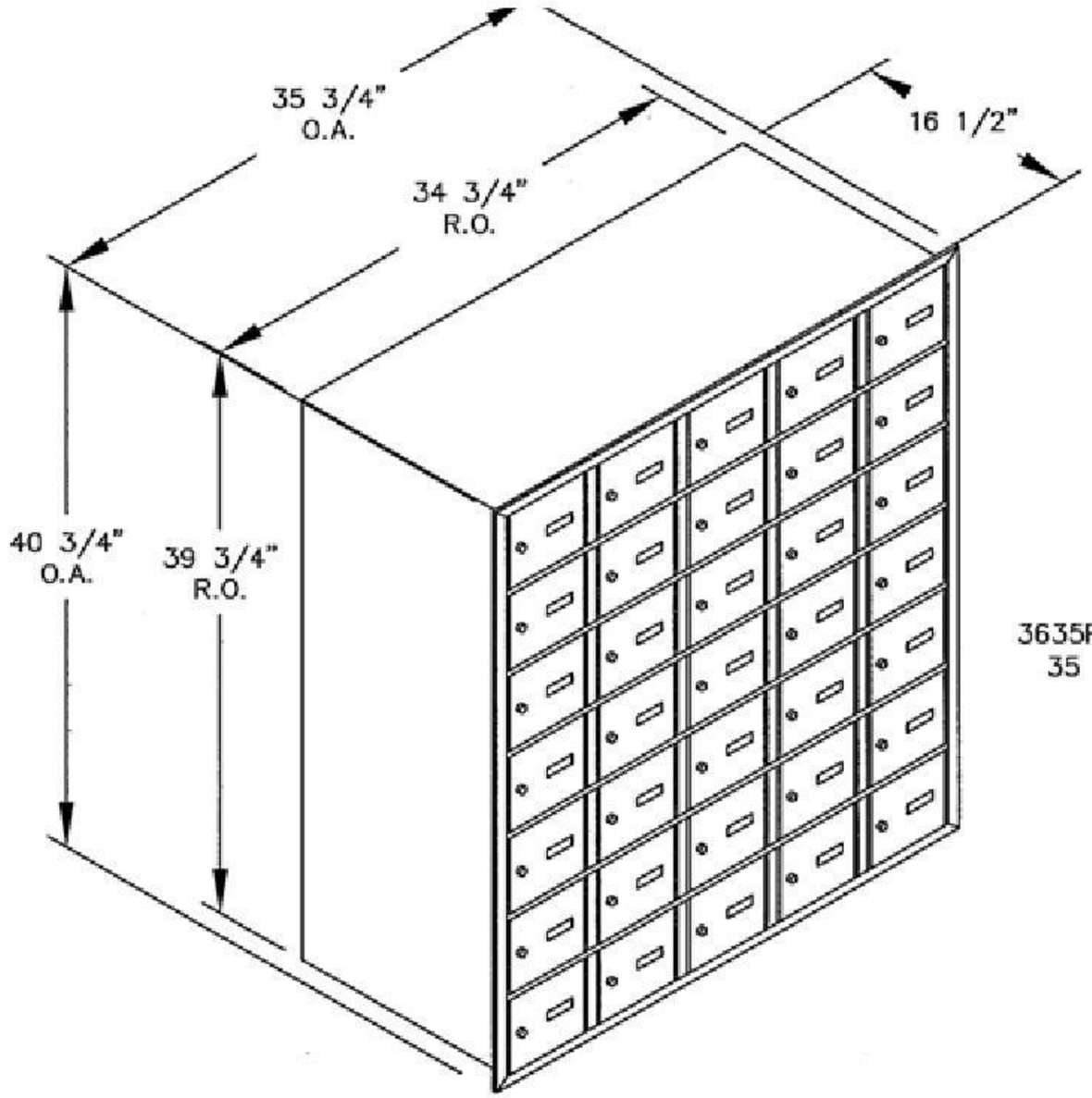

3635RL REAR LOADING
35 'A' SIZE DOORS

MODEL #3635RL

HORIZONTAL MAILBOX–REAR LOADING

AVAILABLE FOR:
USPS ACCESS OR PRIVATE ACCESS