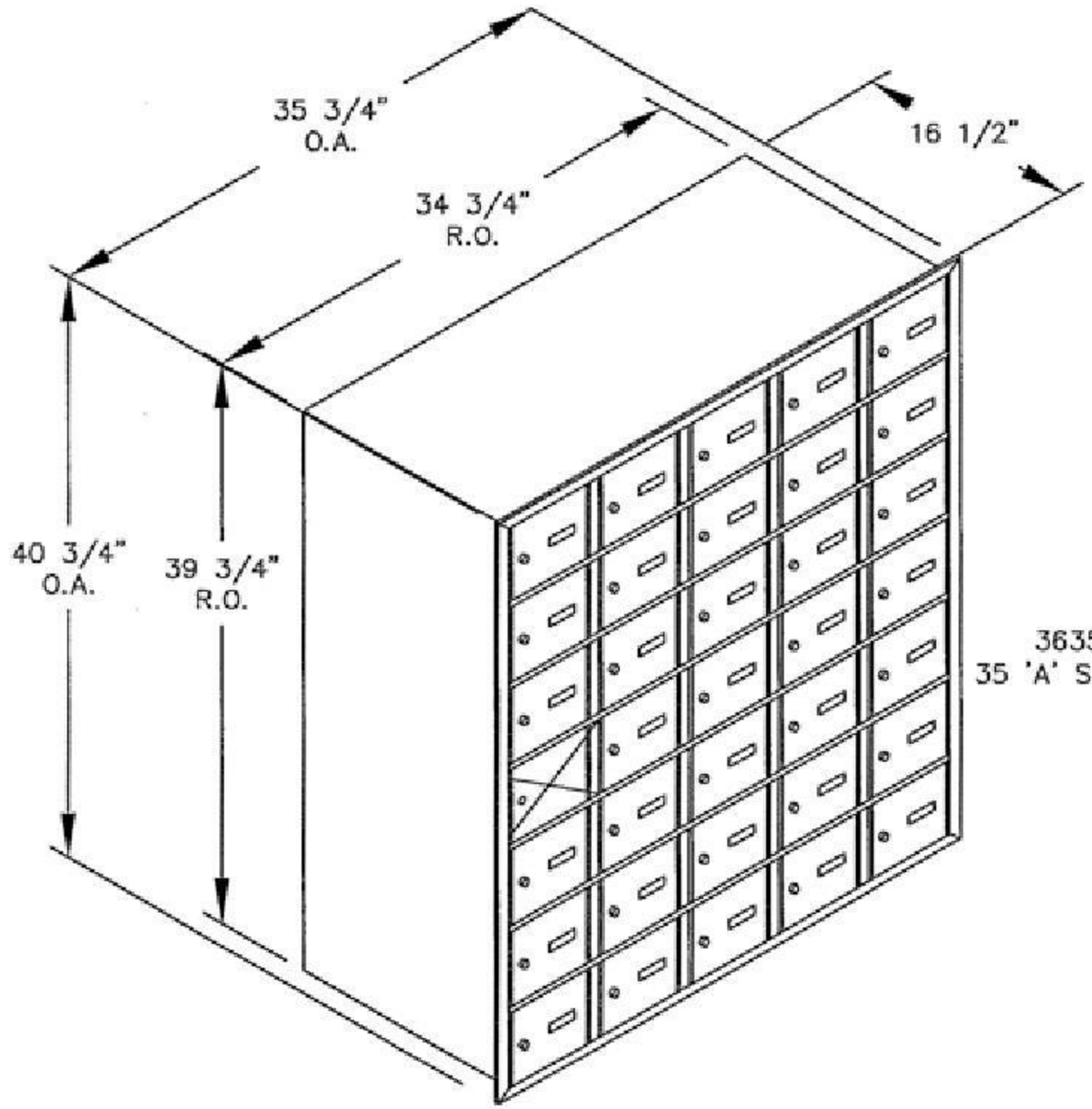

3635FL FRONT LOADING
35 'A' SIZE DOORS (34 USABLE)

MODEL #3635FL

HORIZONTAL MAILBOX–FRONT LOADING

AVAILABLE FOR:
USPS ACCESS OR PRIVATE ACCESS