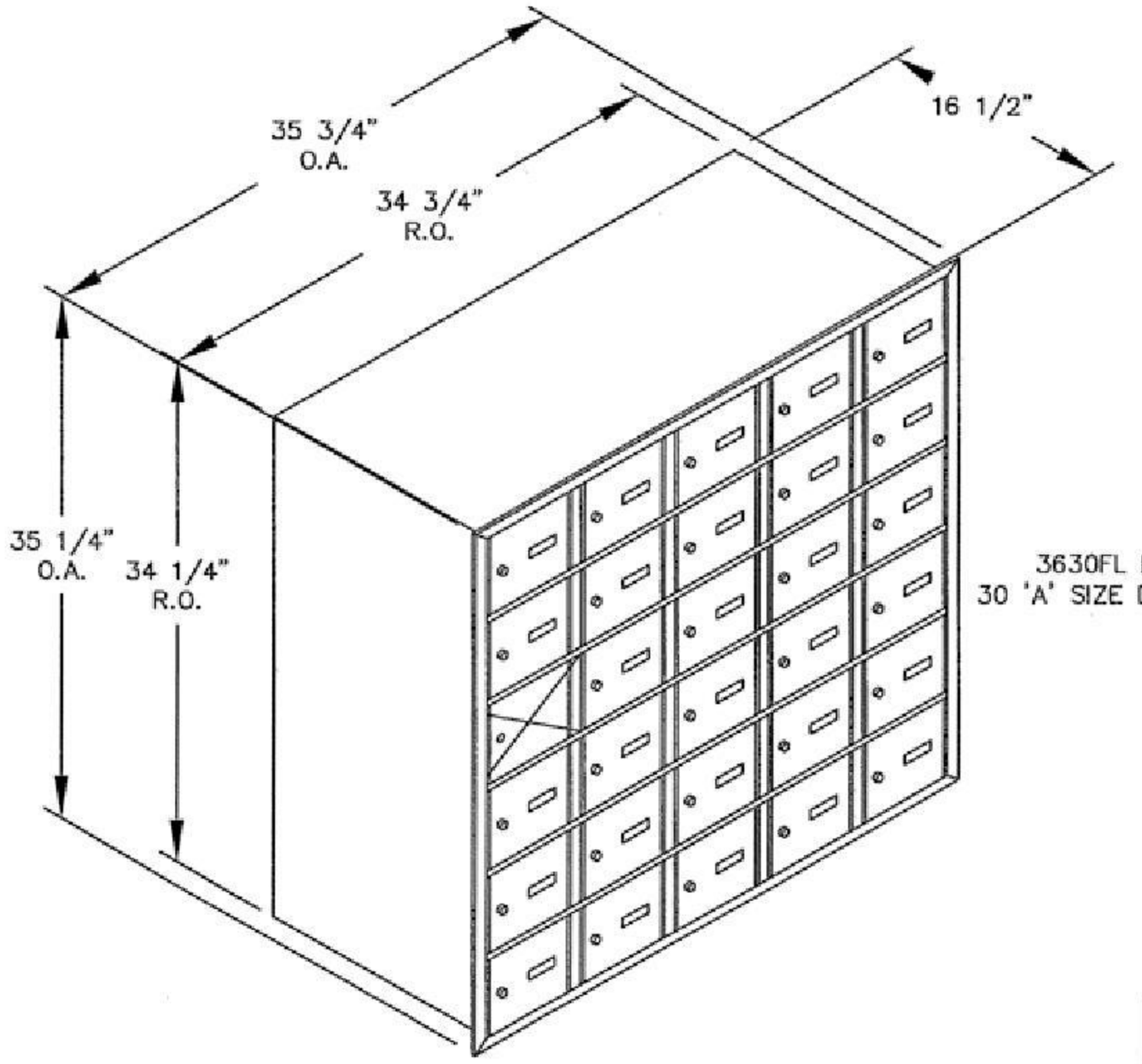

3630FL FRONT LOADING
30 'A' SIZE DOORS (29 USABLE)

MODEL #3630FL

HORIZONTAL MAILBOX–FRONT LOADING

AVAILABLE FOR:
USPS ACCESS OR PRIVATE ACCESS