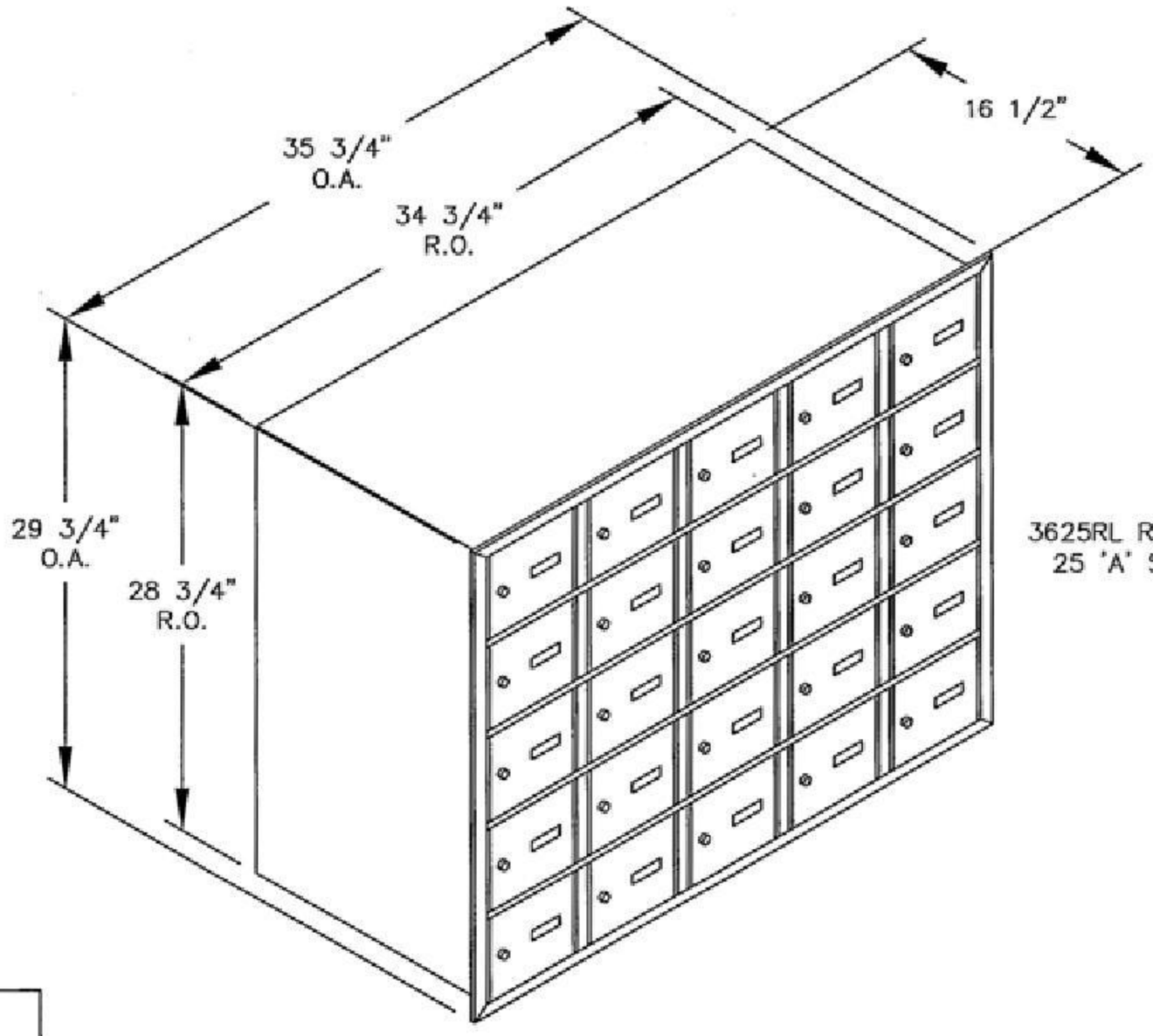

3625RL REAR LOADING
25 'A' SIZE DOORS

MODEL #3625RL

HORIZONTAL MAILBOX–REAR LOADING

AVAILABLE FOR:
USPS ACCESS OR PRIVATE ACCESS